Repair Manual

Passat 1997 ➤
Passat Variant 1997 ➤

Body Interior

Edition 09.2008

Protected by copyright. Copying for private or commercial purposes, in part or in whole, is not permitted unless authorised by Volkswagen AG. Volkswagen AG does not guarantee or accept any liability with respect to the correctness of information in this document. Copyright by Volkswagen AG.

List of Workshop Manual Repair GroupsList of Workshop Manual Repair GroupsList of Workshop Manual Repair Groups

Repair Group

68 - Interior Equipment
69 - Passenger Protection, Airbags, Seat Belts
70 - Interior Trim
72 - Seat Frames
74 - Seat Upholstery, Covers

Protected by copyright. Copying for private or commercial purposes, in part or in whole, is not permitted unless authorised by Volkswagen AG. Volkswagen AG does not guarantee or accept any liability with respect to the correctness of information in this document. Copyright by Volkswagen AG.

Technical information should always be available to the foremen and mechanics, because their careful and constant adherence to the instructions is essential to ensure vehicle road-worthiness and safety. In addition, the normal basic safety precautions for working on motor vehicles must, as a matter of course, be observed.

All rights reserved.
No reproduction without prior agreement from publisher.

Copyright © 2014 Volkswagen AG, Wolfsburg

Contents

68 - Interior Equipment . . . 1
1 Description and Operation . . . 1
1.1 Interior Rearview Mirror . . . 1
1.2 Storage Compartments, Covers and Trim . . . 4
2 Removal and Installation . . . 9
2.1 Interior Rearview Mirror . . . 9
2.2 Storage Compartments, Covers and Trim . . . 11
2.3 Grab Handles . . . 22
2.4 Sill Panel Trim . . . 22
3 Special Tools . . . 26

69 - Passenger Protection, Airbags, Seat Belts . . . 27
1 General Information . . . 27
1.1 Airbag Safety Precautions . . . 27
1.2 Belt Tensioner Safety Precautions . . . 28
1.3 Seat Belt Tensioner Disposal . . . 28
1.4 Airbag Unit Disposal . . . 29
2 Description and Operation . . . 30
2.1 Overview - Seat Belts . . . 30
2.2 Overview - Airbag Installation Locations . . . 35
2.3 Overview - Airbag Installation Locations . . . 36
2.4 Airbag Units, Replacing after an Accident . . . 37
2.5 Overview - Passenger Side Airbag . . . 37
2.6 Overview - Driver and Passenger Seat Side Airbag . . . 39
2.7 Overview - Driver and Passenger Side Airbag Crash Sensor . . . 40
2.8 Overview - Driver Side and Passenger Side Curtain Airbag, Sedan . . . 41
2.9 Overview - Deformation Elements . . . 42
2.10 Overview - Driver Airbag . . . 50
3 Diagnosis and Testing . . . 52
3.1 Seat Belts, Inspecting . . . 52
3.2 Airbag Component Adapting . . . 55
3.3 LATCH Child Seat Anchors, Inspecting after an Accident . . . 55
4 Removal and Installation . . . 56
4.1 Seat Belts . . . 56
4.2 Driver and Passenger Side Airbag . . . 63
4.3 Driver Side and Passenger Side Curtain Airbag, Recaro Seat . . . 65
4.4 Driver and Passenger Side Airbag Crash Sensor . . . 67
4.5 Passenger Side Airbag Unit . . . 68
4.6 Airbag Control Module . . . 69
4.7 Driver Airbag . . . 70
4.8 Steering Wheel . . . 79
4.9 Airbag Spiral Spring/Return Spring with Slip Ring . . . 83
4.10 Driver/Passenger Side Curtain Airbag, Sedan . . . 83
4.11 Driver/Passenger Side Curtain Airbag, Wagon . . . 85
4.12 Deformation Elements . . . 87
5 Special Tools . . . 98

70 - Interior Trim . . . 99
1 Description and Operation . . . 99
1.1 Overview - Luggage Compartment Trim, Wagon . . . 99
2 Removal and Installation . . . 100
2.1 Instrument Panel . . . 100

Volkswagen AG. Volkswagen AG does not guarantee or accept any liability with respect to the correctness of information in this document. Copyright by Volkswagen AG. Reproduction, in whole or in part, for commercial purposes, in part or in whole, is only permitted under the terms and conditions authorized by Volkswagen AG.

2.2 Door Trim . . . 107
2.3 Pillar and Side Trim . . . 112
2.4 Luggage Compartment Trim . . . 132
2.5 Headliner with Tilt/Slide Sunroof, Sedan . . . 151
2.6 Molded Headliner with Sunroof, Wagon . . . 155
3 Special Tools . . . 159

72 - Seat Frames . . . 160
1 Description and Operation . . . 160
1.1 Overview - Front Seat Backrest . . . 160
2 Removal and Installation . . . 161
2.1 Front Seats . . . 161
2.2 Recaro Seats, Front . . . 177
2.3 Rear Seats . . . 198
3 Special Tools . . . 228

74 - Seat Upholstery, Covers . . . 229
1 Removal and Installation . . . 229
1.1 Front Seat Covers and Cushion . . . 229
1.2 Recaro Seat, Covers and Cushions . . . 236
1.3 Rear Seat Covers and Cushion . . . 241
1.4 Seat Heating Elements . . . 252
2 Special Tools . . . 256
3 Revision History . . . 257

Protected by copyright. Copying for private or commercial purposes, in part or in whole, is not permitted unless authorised by Volkswagen AG. Volkswagen AG does not guarantee or accept any liability with respect to the correctness of information in this document. Copyright by Volkswagen AG.

68 – Interior Equipment

1 Description and Operation

(Edition 09.2008)

⇒ “1.1 Interior Rearview Mirror”, page 1

⇒ “1.2 Storage Compartments, Covers and Trim”, page 4

1.1 Interior Rearview Mirror

⇒ “1.1.1 Automatic Dimming Interior Rearview Mirror”, page 1

⇒ “1.1.2 Interior Rearview Mirror Retaining Plate, Attaching”, page 2

⇒ “1.1.3 Interior Rearview Mirror Base with Rain Sensor, Attaching”, page 3

1.1.1 Automatic Dimming Interior Rearview Mirror

The automatically dimming interior rearview mirror dims progressively when the driver is blinded from the rear.

It consists of a mirror element and an electrical element with two photo sensors.

The electronic element registers light incidence from the front and rear through the photo sensors.

If the incident light from the rear is greater than that from the front, a current flows through the electronic element to a conductive coating.

The applied current changes the color of the electrolytes. The electrolyte becomes darker, the greater the current is. The incident light will be reflected to a lesser degree.

The dimming function switches off when reverse gear is engaged. The interior rearview mirror can be used, for example, to back out of a dark garage.

Protected by copyright. Copyright for private or commercial purposes, in part or in whole is not permitted unless authorised by Volkswagen AG. Volkswagen AG does not guarantee or accept any liability with respect to the correctness of information in this document. Copyright by Volkswagen AG.

1 - Interior Rearview Mirror

- ❑ Checking function: Switch the ignition on. Cover photosensor -3- and illuminate photosensor --2- using a flashlight, mirror surface must darken when doing this (reverse gear must not be selected).

2 - Photosensor

3 - Photosensor

4 - Electronics

5 - Glass Pane

6 - Electrolyte Coating

7 - Silver Reflective Coating

8 - Conductive Coating

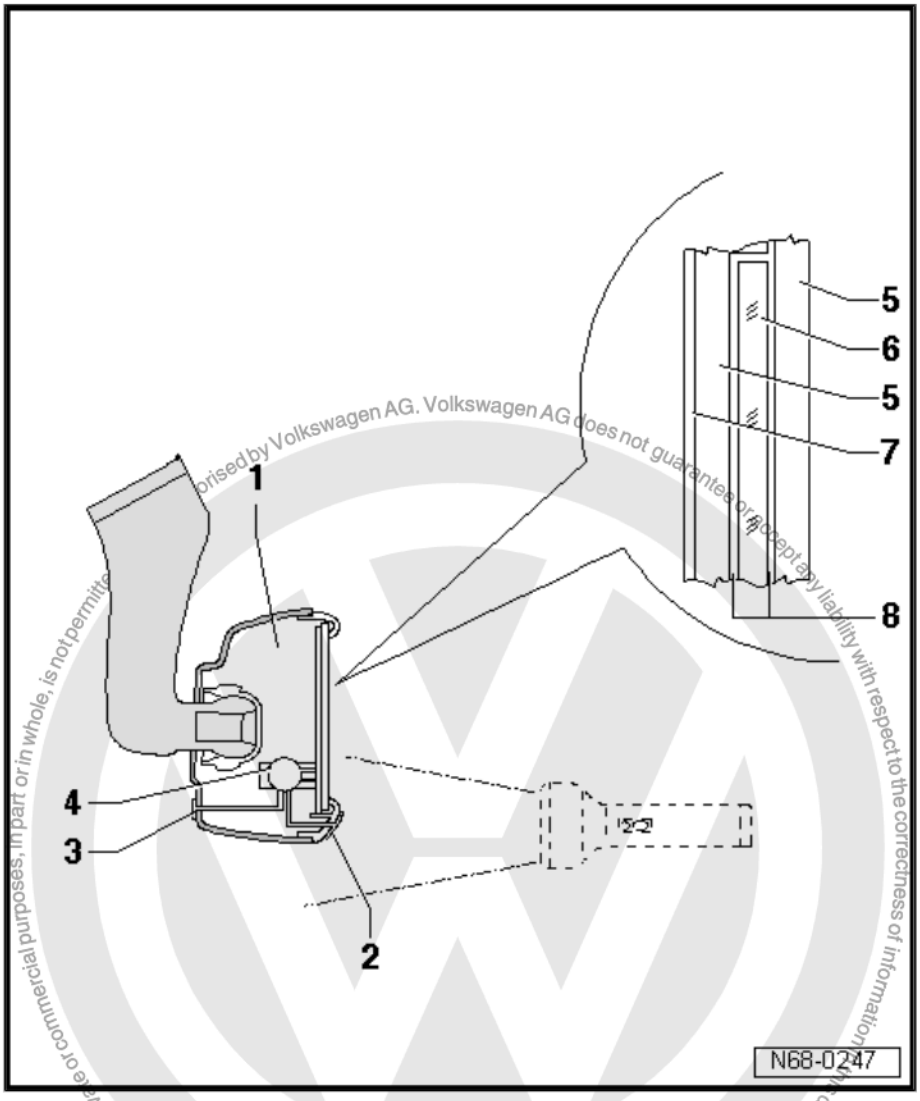

1.1.2 Interior Rearview Mirror Retaining Plate, Attaching

Special tools and workshop equipment required

- ♦ Glass-metal adhesive set D 000 703 A1

1 - Window scraper (commercially available)

2 - Blade (commercially available)

- – Remove retaining plate from mirror base.
- – Remove PUR adhesive material from retaining plate with wire brush.
- – Grind the three spacer knobs off of adhesive surface. To do this, lay sandpaper (360/400 grit) on flat surface.
- – Keep sanded surface free of dirt and grease.
- – Scrape off PUR adhesive and primer from windshield down to ceramic layer using glass scraper.
- – Clean adhesive surface with adhesive remover D 002 000 10 or cleaning solution D 009 401 04.

Protected by copyright. Copyright by Volkswagen AG.

Caution

Do not damage ceramic layer. Scratches always remain visible.

– Cut nylon mesh to exact dimensions of mirror base.

Note

Protective gloves (rubber gloves) should be worn.

– Spread thick layer of adhesive evenly on mirror base.
– Lay nylon mesh on mirror base.
– While continuing to apply adhesive with tube dab nylon mesh.

30 seconds are available from laying the nylon mesh on the adhesive to pressing on the windshield.

– Press mirror base (without force) onto windshield and hold for 15 seconds.
– Use a rag to remove excess adhesive.

Note

The interior rearview mirror can be installed after 15 minutes.

1.1.3 Interior Rearview Mirror Base with Rain Sensor, Attaching

Removal of windshield is no longer necessary, as with previous repair procedure.

At the same time, it is possible to reuse the old, detached mirror base.

If rain sensor is removed from circlip during repairs, adhesive pad is damaged and should be replaced. The adhesive pad is available separately as a replacement part.

Note

The rain sensor does not need to be replaced!

Windshield, Preparing

– All adhesive and primer residue must be removed up to ceramic coating.
– Clean adhesion surface using D 009 401 04 cleaning solution.
– Dry off period must be at least 10 minutes.
– Apply glass/paint primer D 009 200 02.
– Dry off period until bonding: at least 10 minutes to a maximum of 1 hour.

Preparing Used or New Mirror Base

– Use a tool to remove adhesive residue (only for detached mirror base).

Protected by copyright. Copyright by Volkswagen AG. Volkswagen AG does not guarantee or accept any liability with respect to the correctness of information in this document. Copying for private or commercial purposes, in part or in whole, is not permitted unless authorised by Volkswagen AG.

- Prepare adhesive surface by wet-sanding with fine emery paper (800-1200 grit) until water remains (does not bead and run off) on adhesive surface.
- Then clean using D 009 401 04 cleaning solution.

Mirror Base, Installing

- Apply 2C polyurethane adhesive D 180 KD2 A1 direct to prepared and cleaned mirror base adhesive surface.
- Adhesive bead diameter: approximately 2.5 to 3 mm.
- Immediately after applying adhesive on mirror base, press onto prepared windshield.
- Align mirror base on its designated position on ceramic coating and secure using adhesive tape.

Excess Adhesive, Cleaning and Removing

- 0.5... Carefully remove adhesive tape 1 hour after attaching mirror base.
- Carefully remove excess soft adhesive all around using spatula.
- Then remove any remaining excess adhesive using a primer applicator or rag, saturated with cleaning solution.

Installation of Rain Sensor and Mirror

- 2.5 hours after attaching mirror base, rain sensor and mirror can be installed.
- Replace adhesive pad on rain sensor. Refer to ⇒ Electrical Equipment; Rep. Gr. 92 ; Removal and Installation
- Install Rain Sensor - G213- . Refer to ⇒ Electrical Equipment; Rep. Gr. 92 ; Removal and Installation
- Install the interior rearview mirror with rain sensor. Refer to ⇒ “2.1.2 Interior Rearview Mirror with Rain Sensor”, page 9

1.2 Storage Compartments, Covers and Trim

⇒ “1.2.1 Overview - Screen Separator Wall”, page 4

⇒ “1.2.2 Screen Separator Wall Screen Separator Wall, Retrofitting”, page 5

1.2.1 Overview - Screen Separator Wall

Produced by copyright owning Volkswagen AG. Volkswagen AG does not guarantee or accept any liability with respect to the correctness of information in this document. Copyright by Volkswagen AG.
Reproduction of this document or any part of it is not permitted unless authorised by Volkswagen AG.

1 - Screen Separator Wall
- ❑ Rear position, backrest set up

2 - Left Retaining Strip

3 - Bolt
- ❑ 5 Nm
- ❑ Qty. 9

4 - Center and Left Retaining Strip

5 - Collar
- ❑ For locking bolt

6 - Screen Separator Wall
- ❑ Front position, backrest folded up

7 - Cap

8 - Headliner

9 - Front Bracket

10 - Bolt
- ❑ 23 Nm

11 - Front Eyelet

12 - Bolt
- ❑ 23 Nm
- ❑ Qty. 4

13 - Internally Threaded Pop Rivet
- ❑ Qty. 4
- ❑ M8x11

14 - Hex Hole
- ❑ For internally threaded pop rivet

15 - Rear Bracket

16 - Internally Threaded Pop Rivet
- ❑ Qty. 4
- ❑ M8x9

17 - Rear Lifting Eye

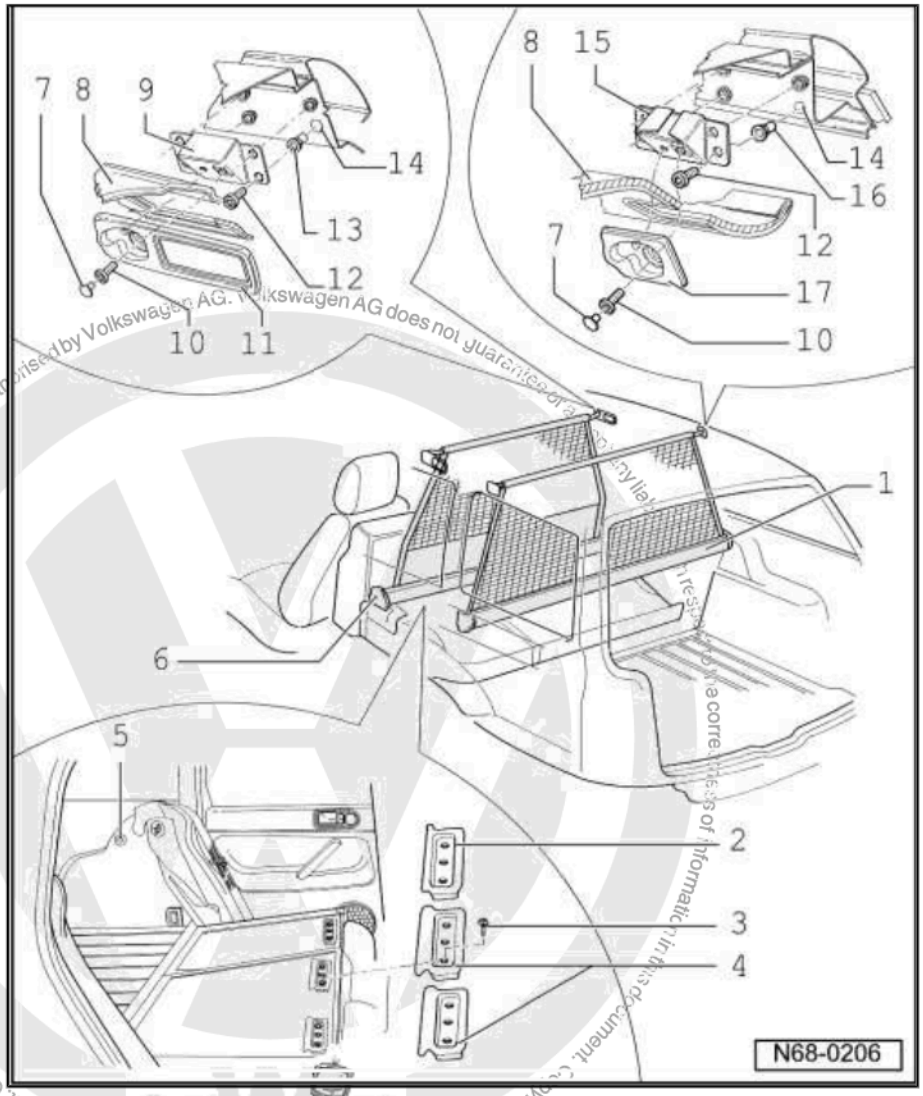

1.2.2 Screen Separator Wall Screen Separator Wall, Retrofitting

Note

- *The required parts must be ordered via Parts Catalog. Note respective vehicle equipment (with/without sun roof).*
- *Edge of luggage compartment cover for vehicles with screen separator wall is slightly cut at transition to screen separator wall. The existing luggage compartment cover can continue to be used only with limited operation.*
- Pop Rivet Pliers - VAG1765B-

Note

Retaining strip -1- for left seatback is different from retaining strips -2- for right seatback -arrows-.

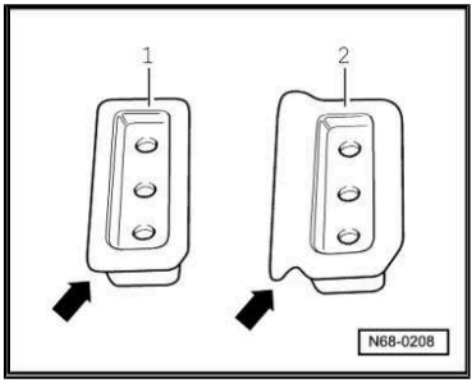

The required mounting points for the retaining strips of the screen separator wall are on the seatback.

– Fold down both backrest parts.
– Determine outer mounting point for the respective retaining strip by inserting scriber according to the specified dimensions.
– Bolt on retaining strip. Use retaining strip as template, pre-punch both mounting holes and screw in bolts. Tightening specification: 5 Nm

Right Retaining Strip

Dimension -a- = 9.5 cm

Dimension -b- = 5 cm

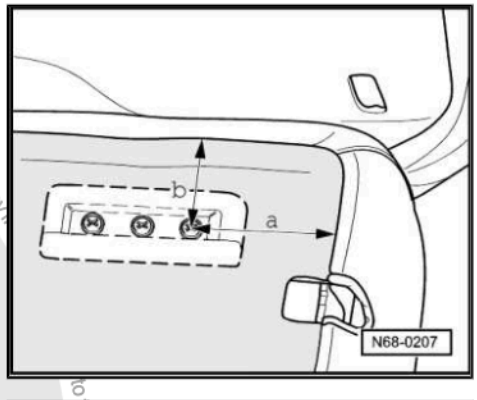

Center retaining strip

Dimension -a- = 7 cm

Dimension -b- = 5 cm

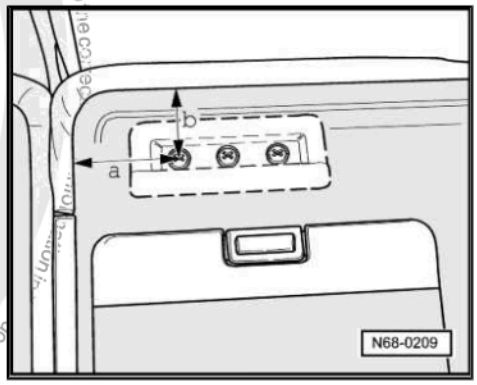

Left retaining strip

Dimension -a- = 11.5 cm

Dimension -b- = 5 cm

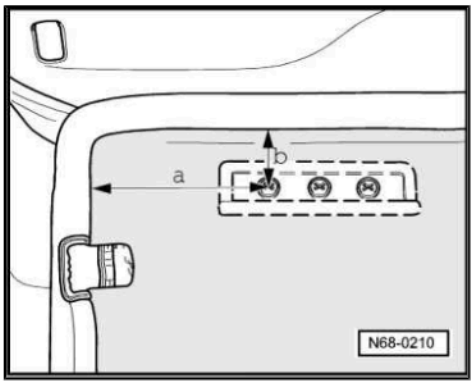

Protected by copyright. Copying for private or commercial purposes, partly or in whole, is not permitted unless authorised by Volkswagen AG. Volkswagen AG does not guarantee or accept any liability with respect to the correctness of information in this document. Copyright by Volkswagen AG.

– Attach screen separator wall -1- with openings -arrows- to right and center bracket -2- and slide to the left until it engages.

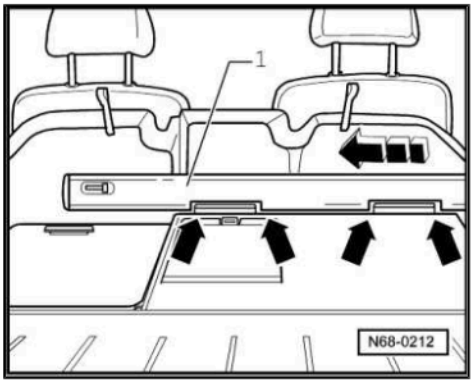

– Fold up both seatback parts until they lock.

– Slide locking pins of screen separator wall toward left and mark point of contact on left luggage compartment cover -arrow-.

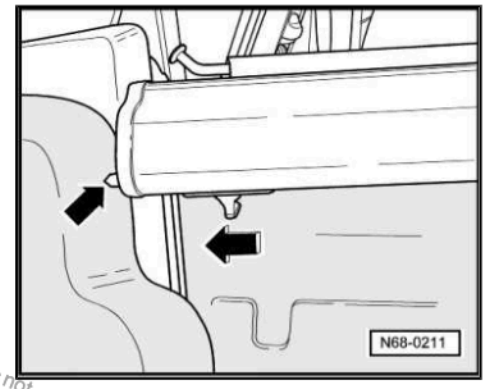

– Place hole (∅ = 20 mm) in trim (e.g. hole circle saw) and press collar -1- in existing body hole.

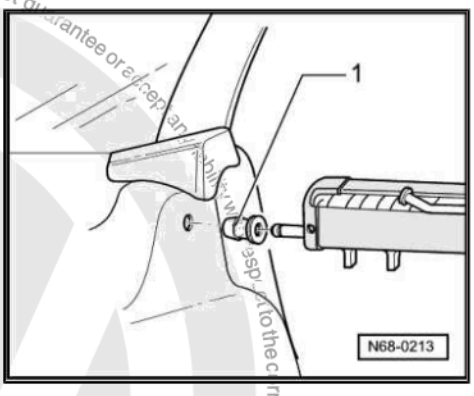

– Remove headliner. Refer to
⇒ “2.5 Headliner with Tilt/Slide Sunroof, Sedan”, page 151 .

– Pull internally threaded pop rivets M8x11 -1- into present holes -2- on front mounting points (in front of interior light) for eyelet using Pop Rivet Pliers - VAG1765B- .

– Install front bracket -3- on both sides with four bolts each -4-. Tightening specification: 23 Nm

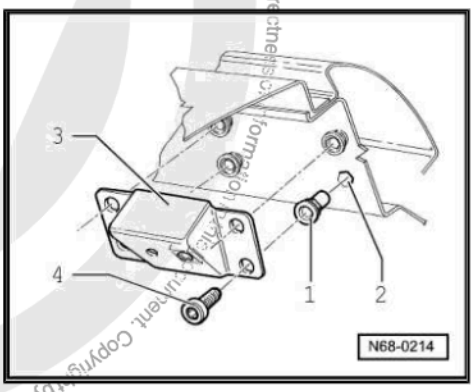

Protected by copyright. Copying for private or commercial purposes, in part or in whole, is not permitted unless authorised by Volkswagen AG. Volkswagen AG does not guarantee or accept any liability with respect to the correctness of information.

– Pull internally threaded pop rivets M8x9 -1- into present holes -2- on rear mounting points for eyelet using Pop Rivet Pliers - VAG1765B- .

– Install rear bracket -3- on both sides with four bolts each -4-. Tightening specification: 23 Nm

– Install headliner and secure only front and back. (Do not install B and C-pillar trim, grab handles or door inner seals).

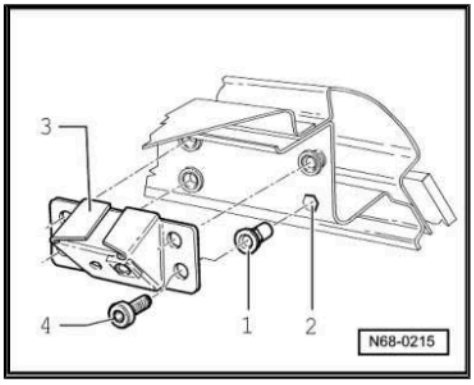

– Work out cut-out in headliner -1- for front eyelet -2- on both sides using workshop tools.

– Install front eyelet -2- on both sides using bolt -3- and press cap -4- into head bolt. Tightening specification: 23 Nm

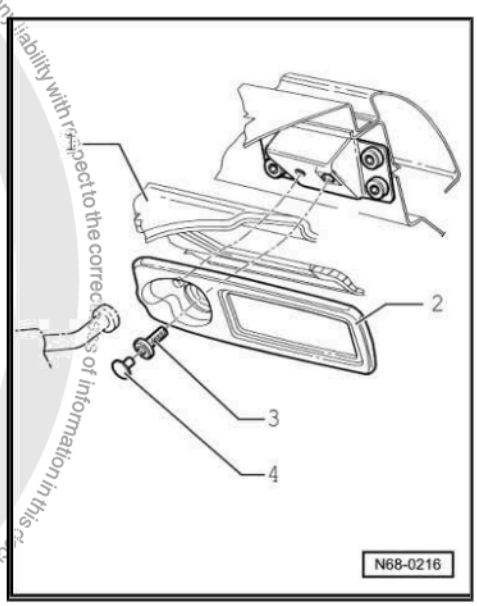

– Work out cut-out in headliner -1- for rear eyelet -2- on both sides using workshop tools.

– Install rear eyelet -2- on both sides using bolt -3- and press cap -4- into head bolt. Tightening specification: 23 Nm

– Install headliner and trim completely.

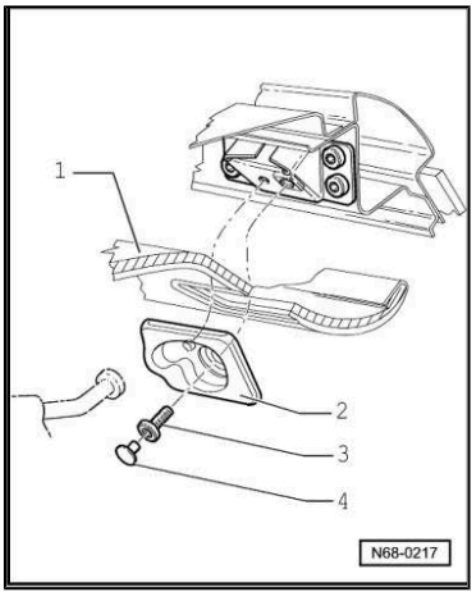

Copyright by Volkswagen AG. Volkswagen AG does not guarantee or accept any liability with respect to the correctness of information in this document. Copying for private or commercial purposes, in part or in whole, is not permitted unless authorised by Volkswagen AG.

2 Removal and Installation

⇒ “2.1 Interior Rearview Mirror”, page 9

⇒ “2.2 Storage Compartments, Covers and Trim”, page 11

⇒ “2.3 Grab Handles”, page 22

⇒ “2.4 Sill Panel Trim”, page 22

2.1 Interior Rearview Mirror

⇒ “2.1.1 Interior Rearview Mirror”, page 9

⇒ “2.1.2 Interior Rearview Mirror with Rain Sensor”, page 9

2.1.1 Interior Rearview Mirror

Removing

– Pull the interior rearview mirror -1- down at an angle -arrow- to release from the retaining plate (retaining springs in mirror base).

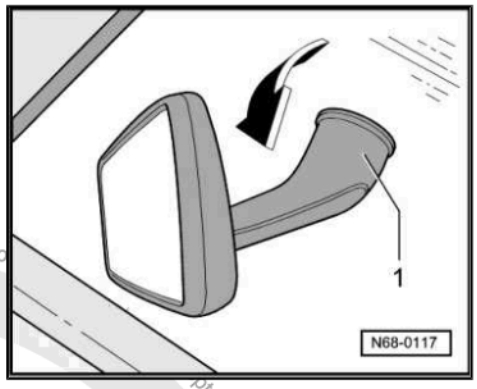

Installing

– Install mirror -1- at a 60 to 90° offset to installation position and turn -arrow- until retaining spring engages.

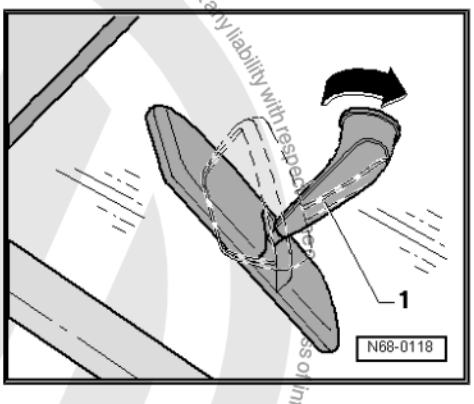

2.1.2 Interior Rearview Mirror with Rain Sensor

Removing

Protected by copyright. Copying for private or commercial purposes, in part or in whole, is not permitted unless authorised by Volkswagen AG. Volkswagen AG does not give any liability with respect to the accuracy of information in this document. Copyright by Volkswagen AG.

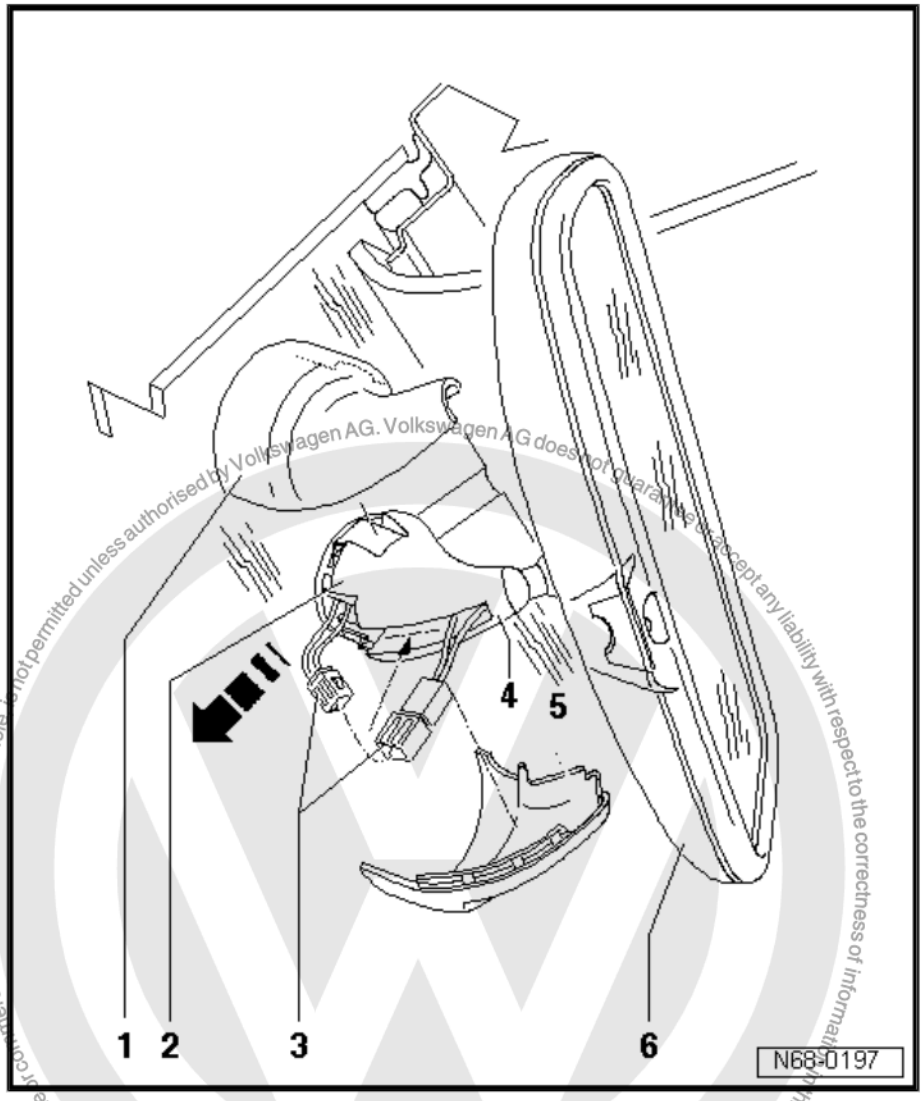

Protected by copyright. Copying for private or commercial purposes, in part or in whole, is not permitted unless authorised by Volkswagen AG. Volkswagen AG does not guarantee or accept any liability with respect to the correctness of information in this document. Copyright by Volkswagen AG.

– Pull apart cover plates at left -1- and right -5- and remove.
– Pull out harness connector -3- from mirror base -4- and disconnect.
– Pull out mirror base -4- with mirror -6- downward from retaining plate -2- -arrow-.

Installing

To install, perform the steps used in removal in reverse order.

2.2 Storage Compartments, Covers and Trim

through 09/2000 ⇒ “2.2.1 Center Console”, page 11

from 10/2000 ⇒ “2.2.2 Center Console”, page 13

⇒ “2.2.3 Front Ashtray”, page 15

through 09/2000 ⇒ “2.2.4 Rear Ashtray”, page 15

through 09/2000 ⇒ “2.2.5 Center Armrest”, page 16

⇒ “2.2.6 Selector Lever Cover”, page 17

⇒ “2.2.7 Front Cup Holder Panels”, page 17

⇒ “2.2.8 Driver Side Storage Compartment”, page 18

⇒ “2.2.9 Passenger Side Storage Compartment”, page 18

⇒ “2.2.10 Glove Compartment Lock Cylinder”, page 20

⇒ “2.2.11 Exterior Rearview Mirror Cover”, page 21

⇒ “2.2.12 Sun Visors”, page 21

2.2.1 Center Console

Removing

– Switch off ignition.
– Open ashtray -1- and pull out ashtray insert -2- -arrow-.
– Flip up center armrest.

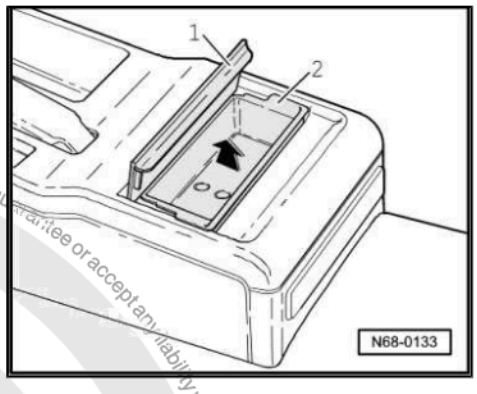

– Remove rubber base from storage compartment -1-.
– Remove the lock nut -2-.

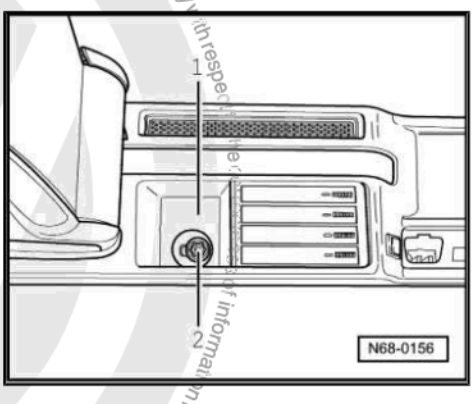

Protected by copyright. Copyright for private or commercial purposes, in part or in whole, is not permitted unless authorised by Volkswagen AG. Volkswagen AG does not guarantee or accept any liability with respect to the correctness of information in this document. Copyright by Volkswagen AG.

– Fold out cup holder -1-.
– Remove the lock nuts -2-.

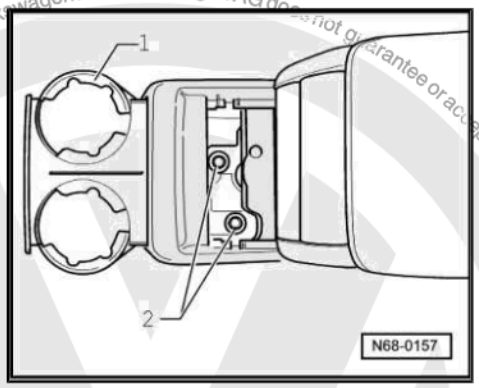

Note

For vehicles without center armrest, only one lock nut is installed under ashtray.

– Pull up parking brake lever.
– Pull off trim -1- from parking brake lever -arrow-.

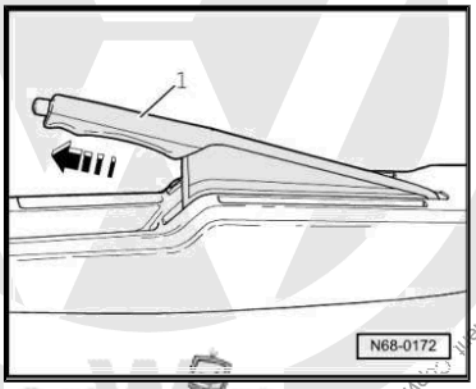

– Pry off caps -1-.
– Remove hex bolts -2-.

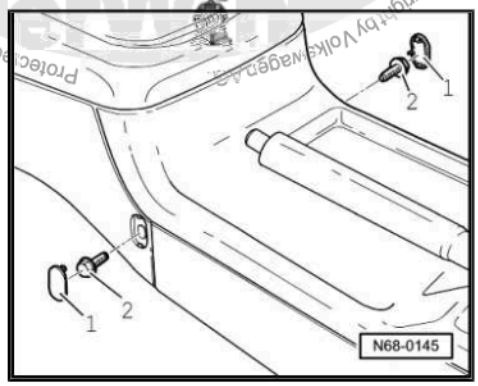

– Remove center console extension -1- from parking brake lever.
– Unclip diagnostic connector -2-.
– Disconnect harness connector -3- from Remote Fuel Filler Door Switch - E204- .

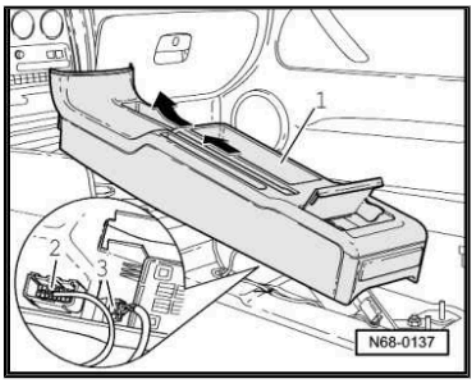

Protected by copyright. Copying for private or commercial purposes, in part or in whole, is not permitted unless authorised by Volkswagen AG. Volkswagen AG does not guarantee or accept any liability with respect to the correctness of information in this document. Copyright by Volkswagen AG.

Only vehicles with manual transmission

– Unclip cover -2-.
– Remove the shift knob -1- together with cover -2- and remove upward.

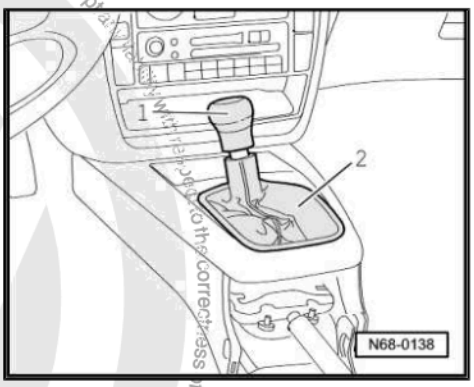

Continuation for all vehicles

– Remove center console -1- from instrument panel and remove upward from shift lever.
– Disconnect harness connector from cigarette lighter -2-.

Installing

To install, perform the steps used in removal in reverse order.

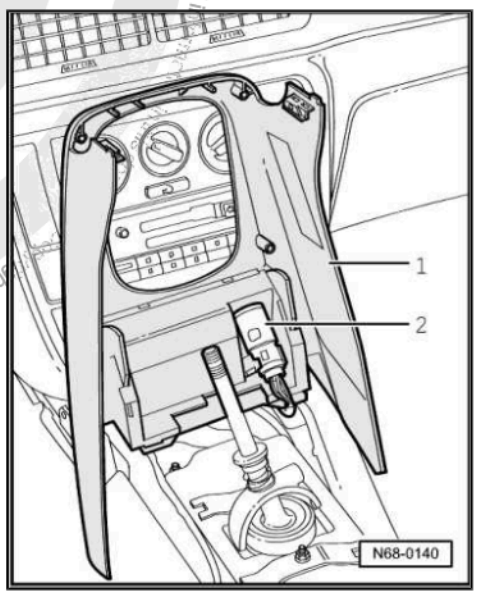

2.2.2 Center Console

Removing

– Switch off ignition.
– Pry off caps -1-.
– Remove hex bolts -2-.

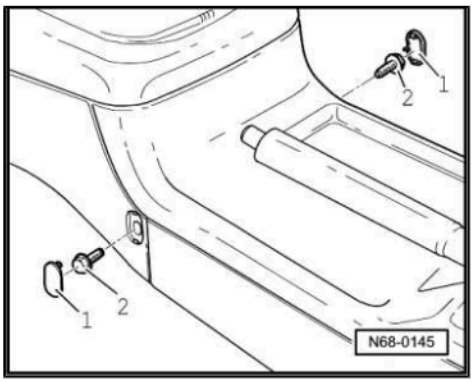

Protected by copyright. Copying for private or commercial purposes, in part or in whole, is not permitted unless authorised by Volkswagen AG. Volkswagen AG does not guarantee or accept any liability with respect to the correctness of information in this document. Copyright by Volkswagen AG.

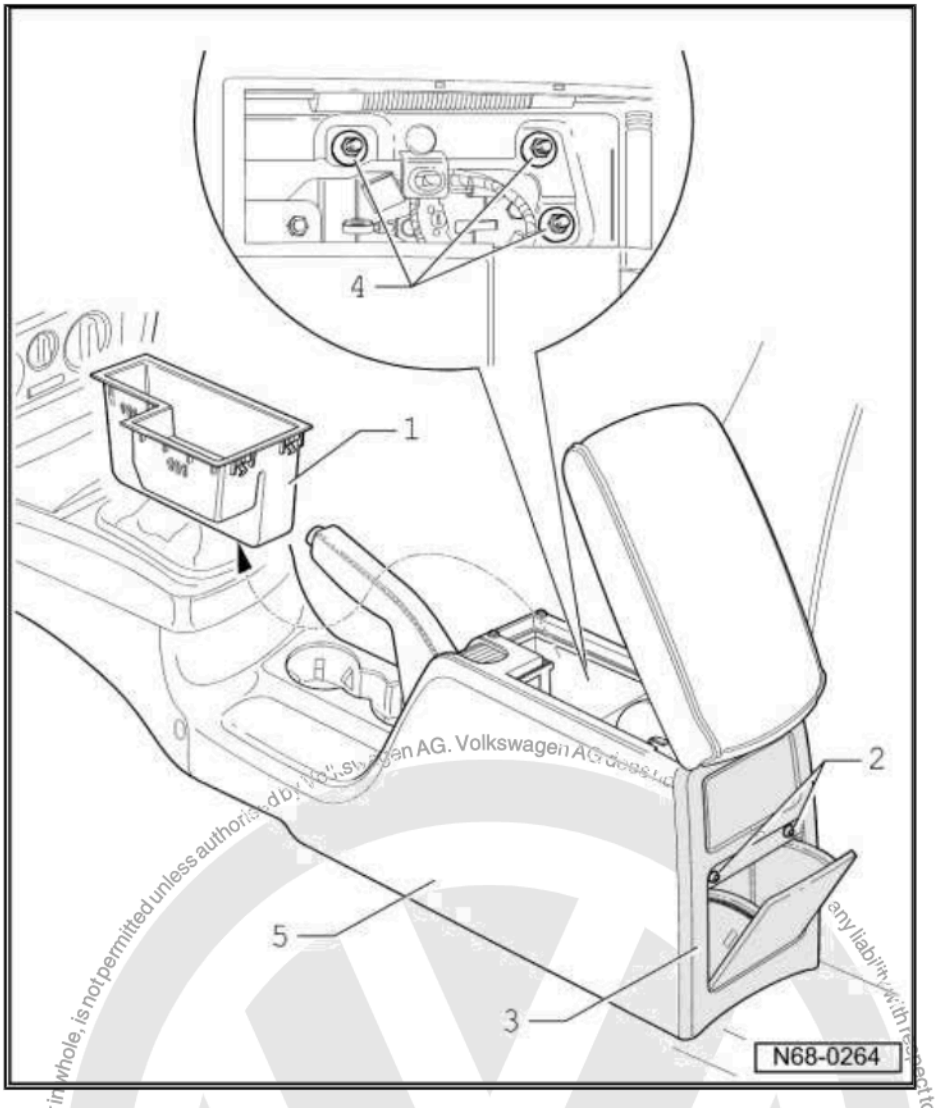

- Raise armrest and remove tray -1-.
- Open ashtray and unscrew two bolts -2-.
- Loosen trim -3-, disconnect harness connector and remove trim.
- Remove three nuts -4-.
- Remove rear part of center console -5-.

With manual transmission

- Unclip cover -2-.
- Remove the shift knob -1- together with cover -2- and remove upward.

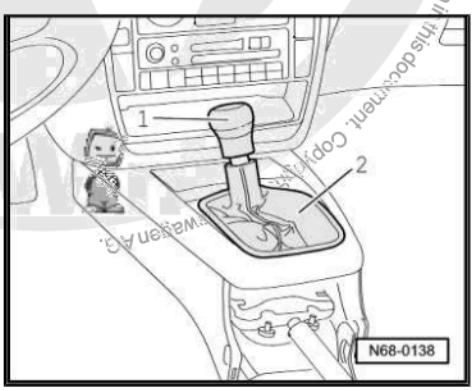

Protected by copyright. Copying for private or commercial purposes, in part or in whole, is not permitted unless authorised by Volkswagen AG. Volkswagen AG does not guarantee or assume any liability with respect to the correctness of information in this document. Copyright by Volkswagen AG.

Continuation for all vehicles

– Remove center console -1- from instrument panel and remove upward from shift lever.

– Disconnect harness connector from cigarette lighter -2-.

Installing

To install, perform the steps used in removal in reverse order.

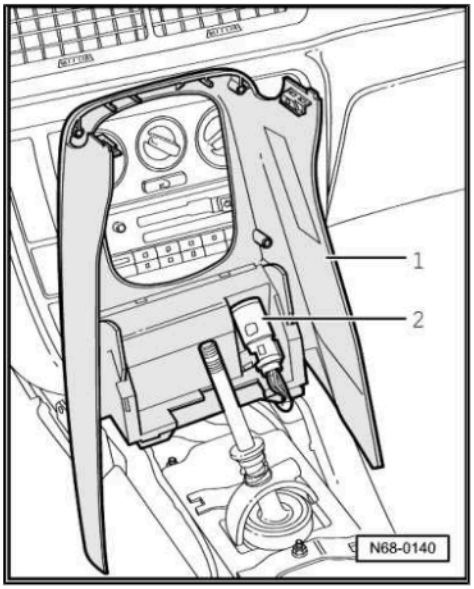

2.2.3 Front Ashtray

– Remove center console.

♦ Through 09/2000. Refer to ⇒ "2.2.1 Center Console", page 11

♦ From 10/2000. Refer to ⇒ "2.2.2 Center Console", page 13

– Unhook tabs -arrows- using small screwdriver and remove ashtray -1- from center console.

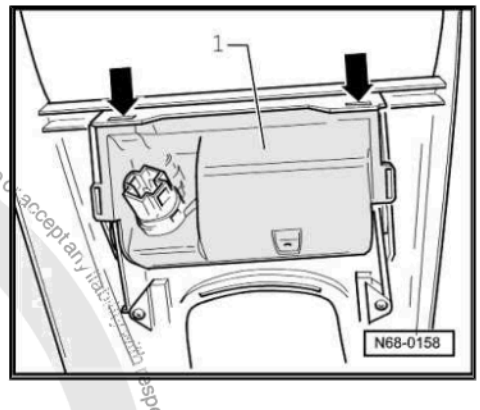

2.2.4 Rear Ashtray

Removing

– Unhook ashtray cover -1- from side holes and remove.

Installing

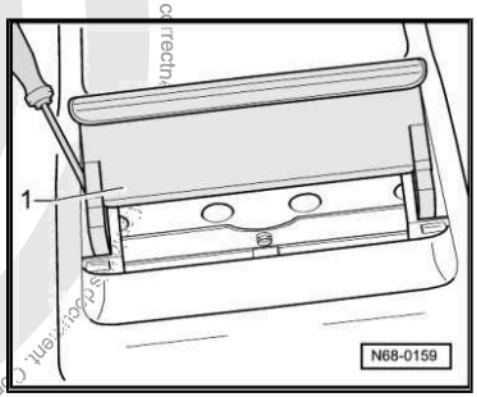

Protected by copyright. Copying for private or commercial purposes, part or in whole, is not permitted unless authorised by Volkswagen AG. Volkswagen AG does not guarantee or accept any liability with respect to the correctness of this document. Copyright by Volkswagen AG.

– Engage cover into side holes -1-.

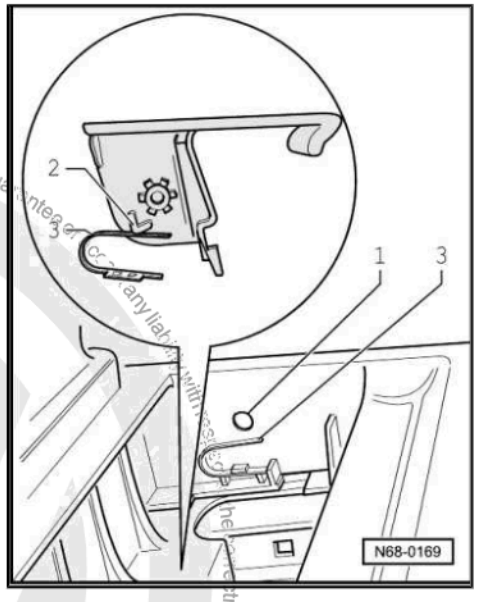

Note

- *Lock stud -2- must lie on spring -3-.*
- *Magnified area shows cover hinge.*

Copyrighted by Volkswagen AG. Volkswagen AG does not guarantee or assume any liability with respect to the correctness of information in this document. Copyrighted by copyright. Copying for private or commercial purposes, in part or in whole, is not permitted unless authorised by Volkswagen AG.

2.2.5 Center Armrest

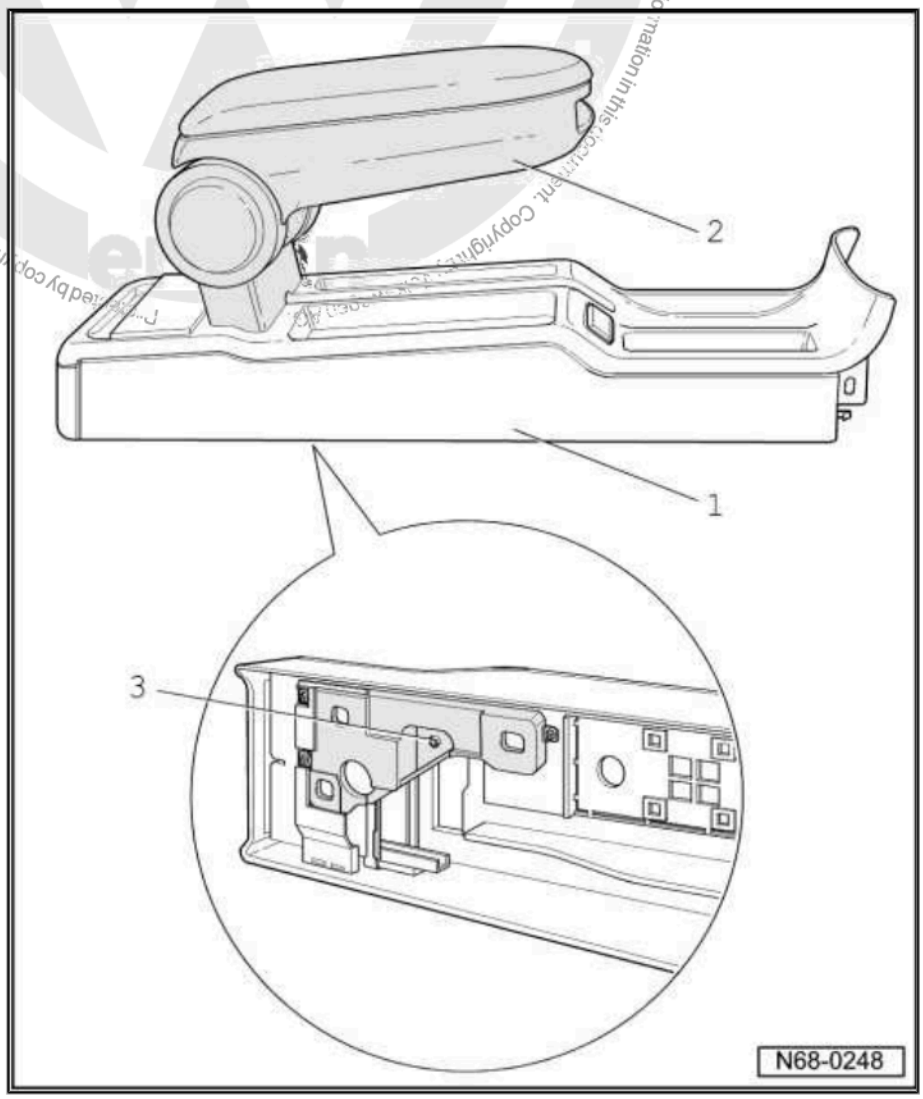

– Remove center console -1-. Refer to
⇒ “2.2.1 Center Console”, page 11 .

– Loosen bolt -3- except for 2 to 3 rotations.

– Lightly tap on bolt head using a hammer in order to separate fitting between armrest -2- and center console -1-.

– Remove bolt -3- and remove center armrest.

2.2.6 Selector Lever Cover

Vehicles with automatic transmission only

Removing

– Remove center console.

♦ Through 09/2000. Refer to
⇒ “2.2.1 Center Console”, page 11

♦ From 10/2000. Refer to ⇒ “2.2.2 Center Console”, page 13

– Remove selector lever knob. Refer to ⇒ Automatic Transmission; Rep. Gr. 37 ; Removal and Installation

– Unhook clips -1- (Qty. 2 each side).

– Remove cover -2- upward.

– Disconnect harness connector -3- -arrow-.

Installing

To install, perform the steps used in removal in reverse order.

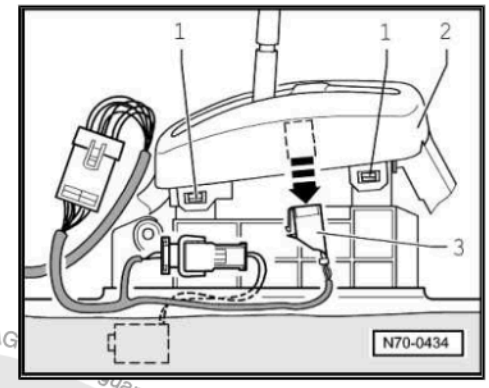

2.2.7 Front Cup Holder Panels

– Pry off right panel -1- from cup holder using screwdriver.

– Pry off left panel -2-.

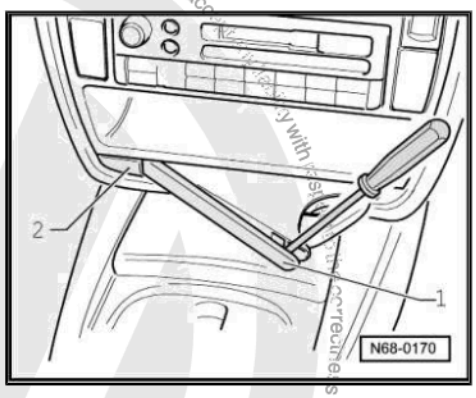

Protected by copyright. Copying for private or commercial purposes, in part or in whole, is not permitted unless authorised by Volkswagen AG. Volkswagen AG guarantee or accept no liability with respect to the correctness of information in this document. Copyright by Volkswagen AG.

2.2.8 Driver Side Storage Compartment

- Pry off cap -1-.
- Remove bolts -2- and -3-.
- Unclip lower A-pillar trim on driver side -4- from sill trim and remove.

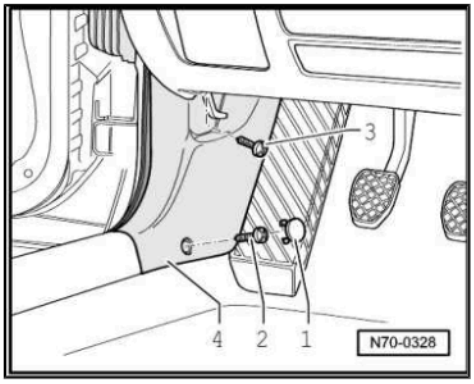

- Unclip cover -1-.
- Remove bolts -arrows-.
- Remove storage compartment on driver side -2-.
- Disconnect harness connectors from light switch -3- and from headlight beam adjuster -4-.

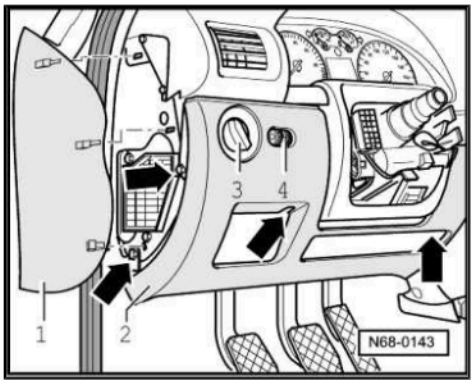

2.2.9 Passenger Side Storage Compartment

Removing

- Switch off ignition.
- Remove the bolts -arrows-.
- Open storage compartment on passenger side -1-.

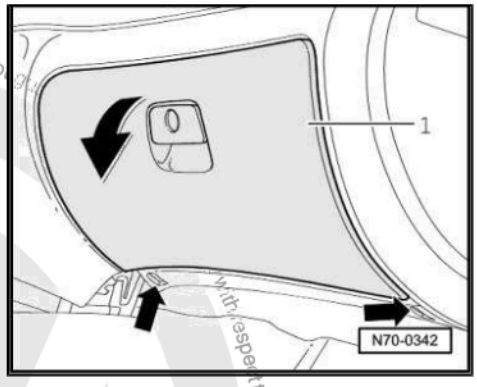

Protected by copyright. Copying for private or commercial purposes, in part or in whole, is not permitted unless authorised by Volkswagen AG. Volkswagen AG does not give any warranty with respect to the correctness of information in this document. Copyright by Volkswagen AG.

– Carefully unclip light at top from locking mechanism using screwdriver.

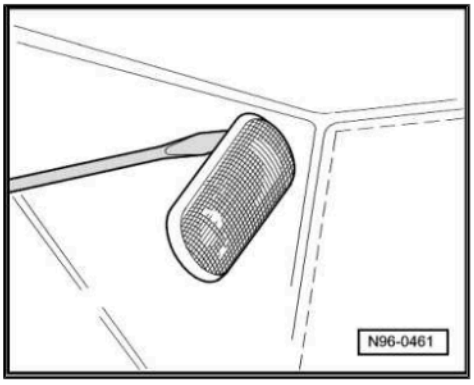

Note

Be careful not to damage glove compartment lamp switch when removing lamp.

– Carefully remove diffusion lens with lamp holder.

– Replace 12V/3W lamp if necessary.

Note

- *Note installation position of glove compartment lamp when installing. Storage compartment switch must point downward!*
- *For the sake of illustration, glove compartment is depicted as removed.*

– Install diffusion lens with mounting plate into storage compartment and engage.

After repair work of glove compartment lamp, a function test of switch must be performed. Lamp must not light up with cover closed!

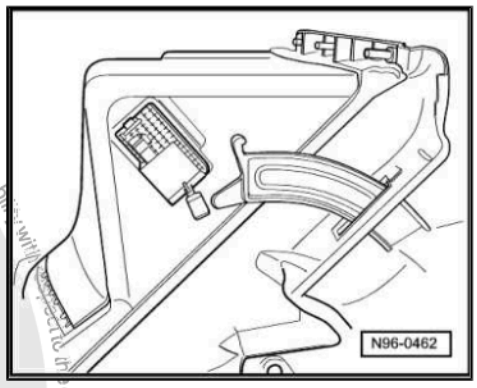

– Remove the bolts -arrows-.

– Disconnect harness connector -2- from lamp -1-.

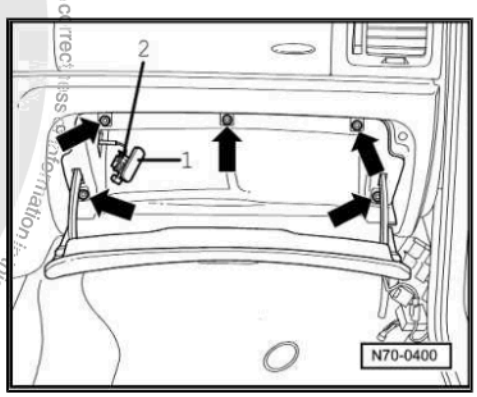

– Pull storage compartment on passenger side -1- out of instrument panel -arrow-.

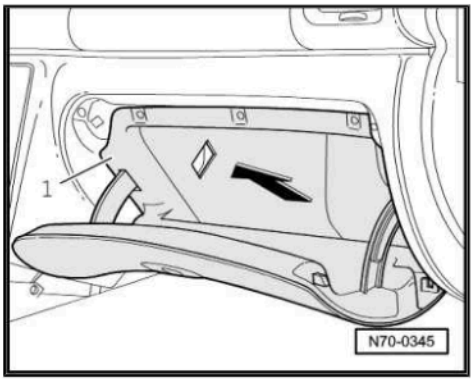

Protected by copyright. Copyright for private or commercial purposes, in part or in whole, is not permitted unless authorised by Volkswagen AG. Volkswagen AG does not guarantee or accept any liability with respect to correctness and completeness of this documentation. This document is intended for training purposes only and is subject to the terms of use. Copyright © Volkswagen AG.

2.2.10 Glove Compartment Lock Cylinder

Removing

– Protect marked area of flap -1- and -2- from damage, e.g. cover with tape.

– To prevent damage to glove compartment, wrap marked area of water pump pliers -3- with adhesive tape.

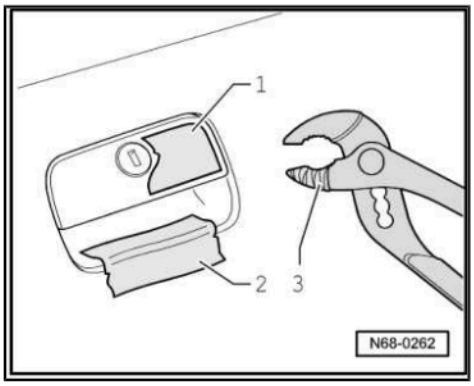

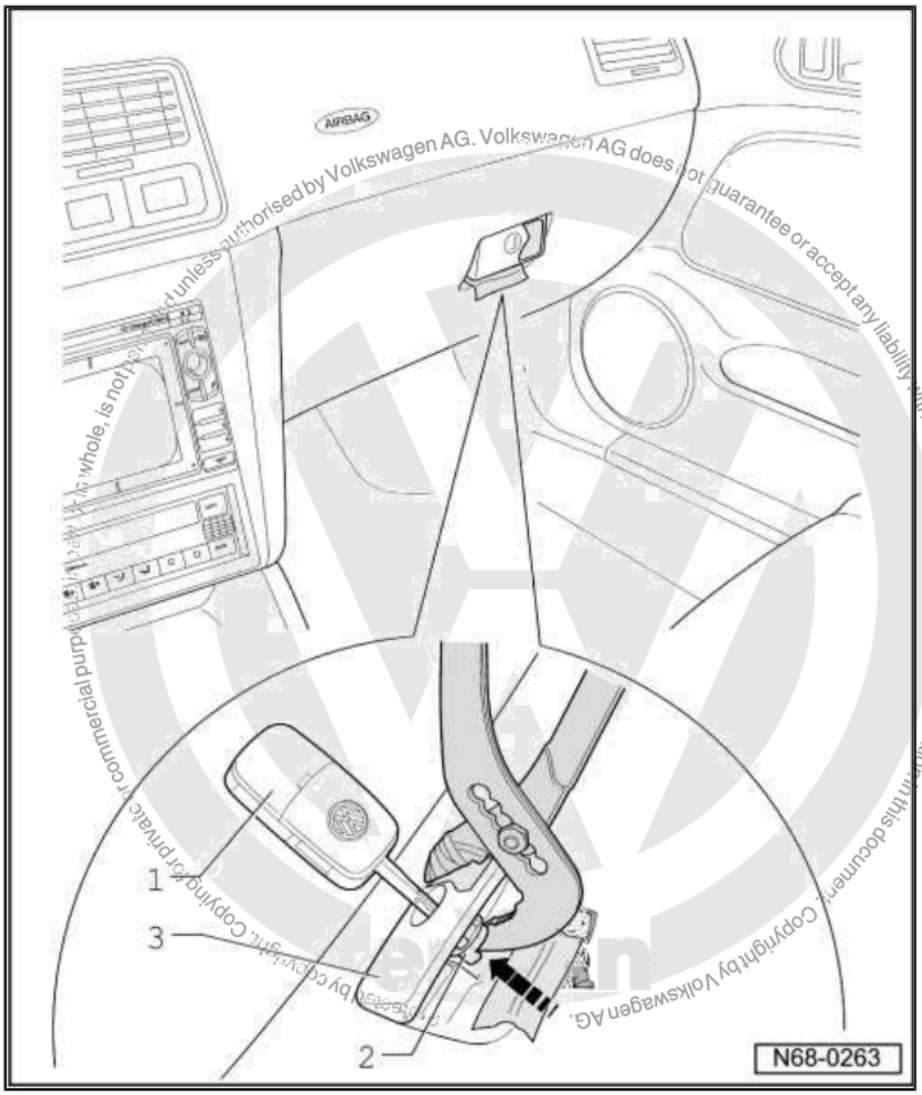

– Insert ignition key -1- into lock cylinder -2-.

– Using water pump pliers, push lock cylinder out of button -3- -arrow-.

Installing

– Press lock cylinder into button opening until it engages audibly.

2.2.11 Exterior Rearview Mirror Cover

Cover without speaker

– Pull cover for exterior rearview mirror -1- upward and off.

Cover with speaker

– Remove front door trim. Refer to
⇒ "2.2.1 Driver Side Front Door Trim", page 107 or
⇒ "2.2.2 Passenger Side Front Door Trim", page 109 .

– Remove foam sleeve -3- from harness connectors and disconnect harness connector for speaker -2-.

– Pull cover for exterior rearview mirror -1- upward and off.

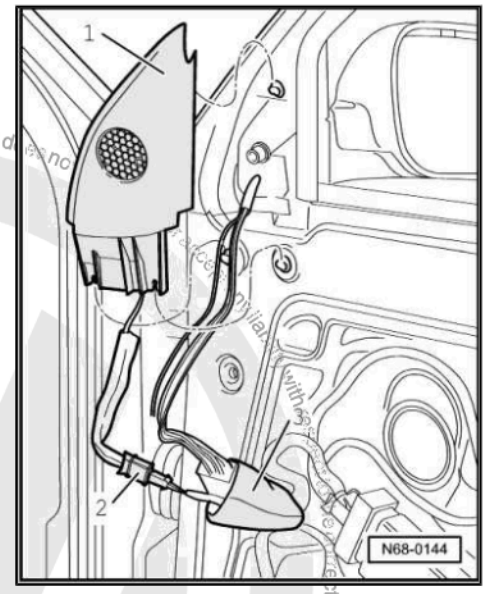

2.2.12 Sun Visors

– Unhook sun visor -1- out of mount -2-.

– Pry off cap -6-.

– Remove the bolt -5-.

– Remove sun visor mount -4- from mounting and disconnect harness connector -3-.

– Pry off cap -7-.

– Remove bolts -8- and remove mounts -2-.

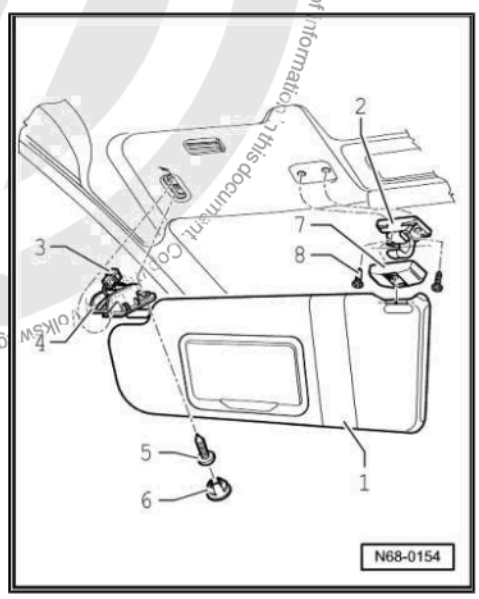

Protected by copyright. Copying for private or commercial purposes, in part or in whole, is not permitted unless authorized by Volkswagen AG. Volkswagen AG does not guarantee or accept any liability with respect to the correctness of information in this document. Copyright by Volkswagen AG.

2.3 Grab Handles

– Fold grab handle -1- downward.
– Pry up covers -2- using a screwdriver and fold upward.
– Remove the screws -3- and remove grab handle -1-.

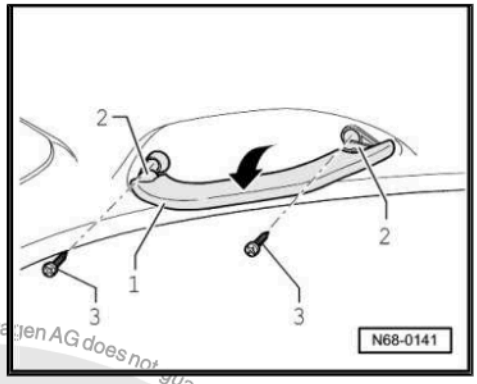

2.4 Sill Panel Trim

Removing

Note

The illustrations cover only one side of vehicle, the other side of vehicle is similar.

– Disengage backrest for rear seat bench and push forward.
– Loosen hex nut -2- and remove lock bolt -3-.
– Pull cushion -1- in upper area out of clip -4-, press lower tab -6- to rear from sill panel -7- and remove upward with tab -5-.

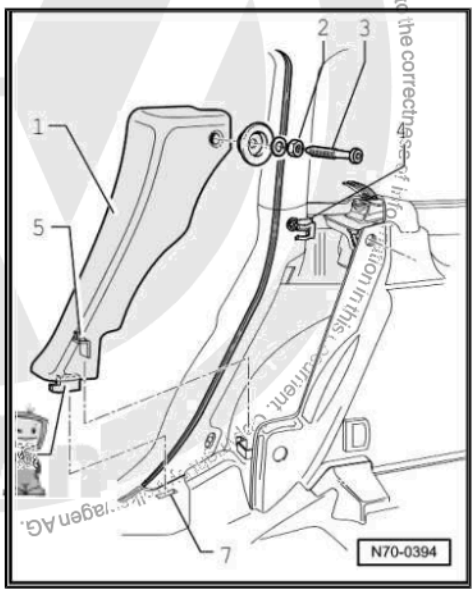

Protected by copyright. Copying for private or commercial purposes, in part or in whole is not permitted unless authorised by Volkswagen AG. Volkswagen AG does not guarantee or accept any liability with respect to the correctness of information in this document.

– Remove the bolts -1-.
– Remove trim -2- from clip -3- and from C-pillar.

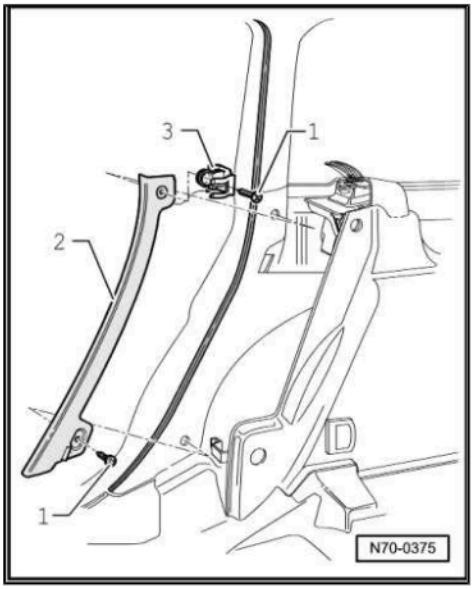

– Pry off cap -1-.
– Remove bolts -2- and -3-.
– Unclip lower A-pillar trim on passenger side -4- from sill panel and remove.

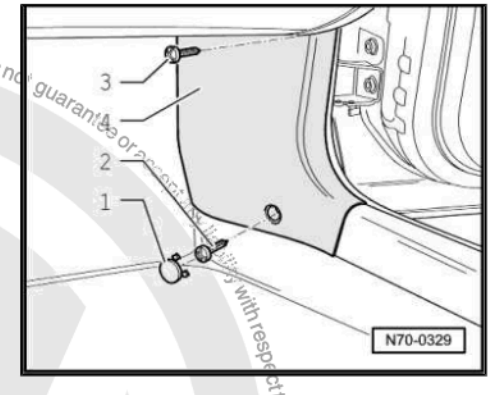

Protected by copyright. Copying for private or commercial purposes, in part or in whole, is not permitted unless authorised by Volkswagen AG. Volkswagen AG does not guarantee or accept any liability with respect to the correctness of information in this document. Copyright by Volkswagen AG.

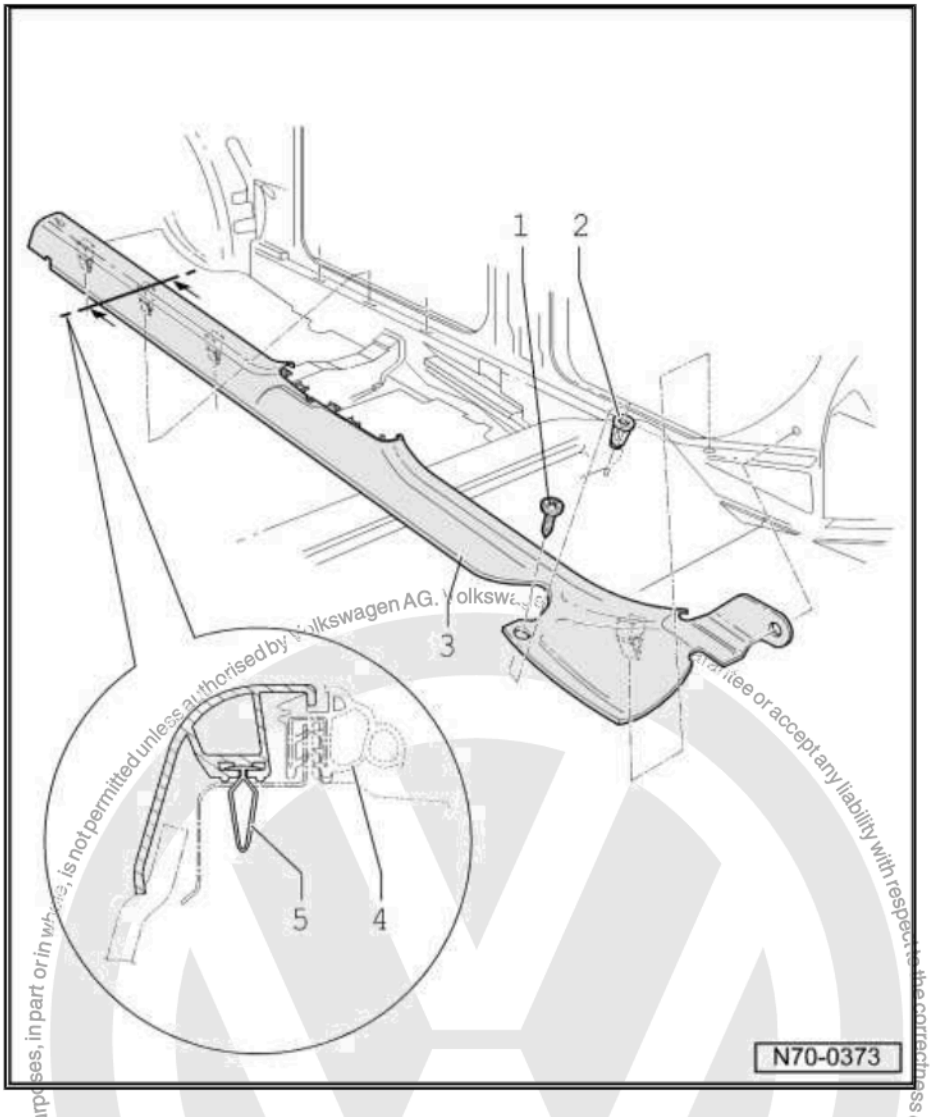

– Remove the bolt -1-.
– Unclip sill panel -3-.

Installing

Protected by copyright. Copying for private or commercial purposes, in part or in whole, is not permitted unless authorised by Volkswagen AG. Volkswagen AG does not guarantee or accept any liability with respect to the correctness of information in this document. Copyright by Volkswagen AG.

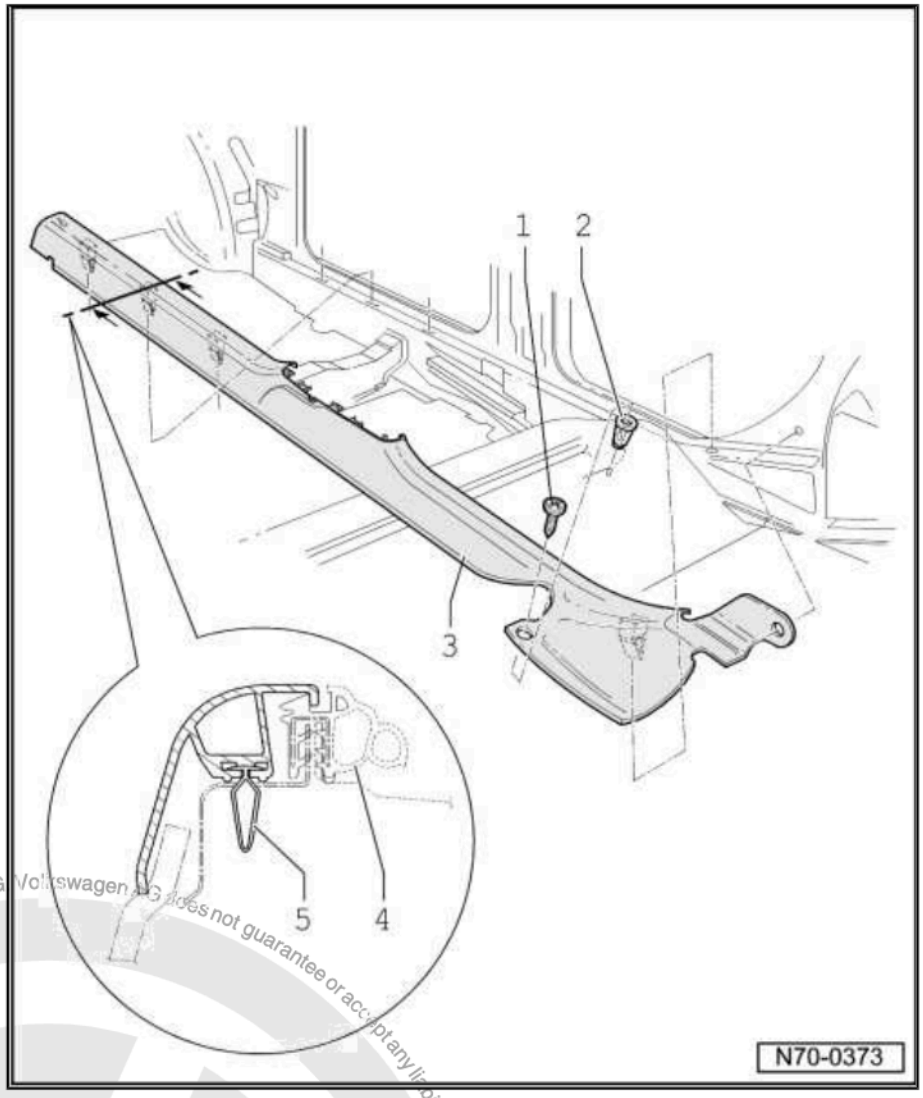

To install, perform the steps used in removal in reverse order.

Note

- *Before installing sill panel, check expanding nut -2- and clips -5- and replace if necessary.*
- *After installing, make sure that sill panel seal is properly seated -4-.*

Protected by copyright. Copying for private or commercial purposes, in part or in whole, is not permitted unless authorised by Volkswagen AG. Volkswagen AG does not guarantee or accept any liability with respect to the correctness of information in this document. Copyright by Volkswagen AG.

3 Special Tools

Special tools and workshop equipment required

- Pop Rivet Pliers - VAG1765B-

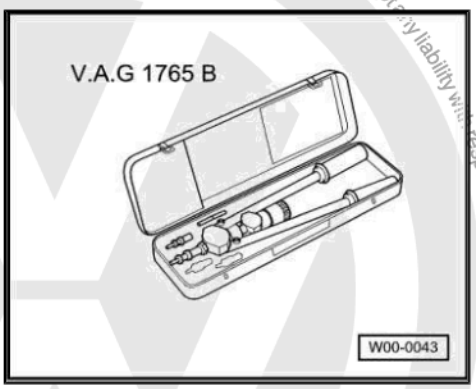

Protected by copyright. Copying for private or commercial purposes, in part or in whole, is not permitted unless authorised by Volkswagen AG. Volkswagen AG does not guarantee or accept any liability with respect to the correctness of information in this document. Copyright by Volkswagen AG.

69 – Passenger Protection, Airbags, Seat Belts

1 General Information

⇒ “1.1 Airbag Safety Precautions”, page 27

⇒ “1.2 Belt Tensioner Safety Precautions”, page 28

⇒ “1.3 Seat Belt Tensioner Disposal”, page 28

⇒ “1.4 Airbag Unit Disposal”, page 29

1.1 Airbag Safety Precautions

Caution

- *Testing, removing, installing and repair work may only be performed by qualified personnel.*
- *When working on the airbag system, the battery Ground (GND) strap must be disconnected. No waiting time is necessary after disconnecting battery. When connecting the airbag system to a voltage source, there must be no person present inside the vehicle.*
- *Before picking up (touching) the airbag unit, the mechanic/technician must electrostatically discharge him/herself. This is achieved by touching a suitable metal part, for example, a water pipe, heater pipe or metal frame.*
- *Airbag units should be installed immediately upon removal from shipping package.*
- *Airbag unit is to be returned to shipping package when there is an interruption in work.*
- *It is not acceptable to leave airbag unit unattended.*
- *Airbag units which have been removed should be stored so that padded side is facing up.*
- *Airbag units that have fallen onto a hard surface or show signs of damage must not be installed in vehicle.*

Additional safety precautions for vehicles with side curtain airbag

Caution

- *Always replace damaged pillar trim panels, never repair.*
- *Head curtain airbags must not be kinked or twisted.*
- *After body repairs, inspect the body for weld splatter, deformations and chafing areas near the head curtain airbag (compare with opposite side if necessary).*
- *If a deployed head curtain airbag is replaced, the headliner, door seals with weather stripping, curtain airbag guides, grab handle brackets, and the A, B, C and (if equipped) D-pillar trim must be replaced. If damaged, interior (rear) reading lights, roof grab handle and roof end light must also be replaced.*

Protected by copyright. Copying for private or commercial purposes, in part or in whole, is not permitted unless authorised by Volkswagen AG. Volkswagen AG does not guarantee or accept any liability with respect to the correctness of information in this document. Copyright by Volkswagen AG.

Copyright by Volkswagen AG. Volkswagen AG does not guarantee or accept any liability with respect to the correctness of information in this document. Copyright by Volkswagen AG. Copying for private or commercial purposes, in part or whole, is not permitted unless authorized by Volkswagen AG.

1.2 Belt Tensioner Safety Precautions

Caution

- *Testing, removing, installing and repair work may only be performed by qualified personnel.*
- *Belt tensioner components may not be opened nor repaired; always use new parts (risk of injury).*
- *Belt tensioners that were subject to hard blows or have been dropped on the floor, must not be installed in a vehicle.*
- *Belt tensioners that are mechanically damaged (dents, cracks) must always be replaced.*
- *Storage and transport is subject to laws governing explosive materials.*
- *Belt tensioners should be installed immediately after removing them from the shipping package.*
- *An impact wrench may not be used to remove the belt tensioner.*
- *Belt tensioner is to be returned to shipping package when work is interrupted.*
- *It is not acceptable to leave belt tensioner unattended.*
- *The belt tensioner may not be treated with grease, cleaning agents, or similar materials, and may not be exposed, even briefly, to temperatures above 212° F (100° C).*
- *The pyrotechnic propellant has no expiration date, i.e. it has unlimited service life and is maintenance-free.*

1.3 Seat Belt Tensioner Disposal

WARNING

It is dangerous to scrap an unignited gas generator.

The belt tensioner unit gas generator must be made unusable before scrapping. This is important because the gas generator is a pyrotechnic device that can cause injury if activated improperly (for instance when using a cutting torch).

Belt tensioner units that have ignited can be disposed of as industrial waste.

– Use J-44210 Deployment Fixture and refer to the Airbag & Pyrotechnic Deployment Device Instruction Booklet for proper deployment procedure.

- Make sure that your dealership complies with federal, state and local regulations for explosive substances.
- Deployed airbags and pyrotechnic seatbelts can be disposed of as normal scrap.
- Undeployed airbags and pyrotechnic seatbelts are considered to be hazardous materials. When disposing of an undeployed airbag or pyrotechnic seatbelt that is either defective or expired, use the appropriate repair information and Airbag Deployment Device J-44210. DO NOT deploy airbags and pyrotechnic seatbelts in the vehicle.

- All airbags and pyrotechnic seatbelts of a vehicle scheduled to be scrapped must be deployed using the Airbag Deployment Device J-44210.
- When using Airbag Deployment Device J-44210, wear appropriate eye and ear protection.
- If the airbag or pyrotechnic seatbelt cannot be safely deployed or removed from the vehicle, contact the Volkswagen Dealer Technicians Helpline.
- Shipment of active airbag gas generators and pyrotechnic seatbelt retractors must be in accordance with the regulations published in the latest edition of the Code of Federal Regulations #49 (49 CFR). Shipment must be initiated and received by certified individuals. The penalties for noncompliance are severe. Civil penalties range the $250 to $27,500 per violation, per day. Criminal penalties, for willfully violating the regulations, range up to $250,000 for individuals and $500,000 for corporations.

1.4 Airbag Unit Disposal

- Make sure that your dealership complies with federal, state and local regulations for explosive substances.
- Deployed airbags and pyrotechnic seatbelts can be disposed of as normal scrap.
- Undeployed airbags and pyrotechnic seatbelts are considered to be hazardous materials. When disposing of an undeployed airbag or pyrotechnic seatbelt that is either defective or expired, use the appropriate repair information and Airbag Deployment Device J-44210. DO NOT deploy airbags and pyrotechnic seatbelts in the vehicle.

- All airbags and pyrotechnic seatbelts of a vehicle scheduled to be scrapped must be deployed using the Airbag Deployment Device J-44210.
- When using Airbag Deployment Device J-44210, wear appropriate eye and ear protection.
- If the airbag or pyrotechnic seatbelt cannot be safely deployed or removed from the vehicle, contact the Volkswagen Dealer Technicians Helpline.
- Shipment of active airbag gas generators and pyrotechnic seatbelt retractors must be in accordance with the regulations published in the latest edition of the Code of Federal Regulations #49 (49 CFR). Shipment must be initiated and received by certified individuals. The penalties for noncompliance are severe. Civil penalties range the $250 to $27,500 per violation, per day. Criminal penalties, for willfully violating the regulations, range up to $250,000 for individuals and $500,000 for corporations.

Protected by copyright. Copying for private or commercial purposes, in whole or in parts, is not permitted unless authorized by Volkswagen AG. Volkswagen AG does not guarantee or accept any liability with respect to the correctness of information in this document. Copyright by Volkswagen AG.

2 Description and Operation

⇒ “2.1 Overview - Seat Belts”, page 30

through 09/2000
⇒ “2.2 Overview - Airbag Installation Locations”, page 35

from 10/2000
⇒ “2.3 Overview - Airbag Installation Locations”, page 36

⇒ “2.4 Airbag Units, Replacing after an Accident”, page 37

⇒ “2.5 Overview - Passenger Side Airbag”, page 37

⇒ “2.6 Overview - Driver and Passenger Seat Side Airbag”, page 39

⇒ “2.7 Overview - Driver and Passenger Side Airbag Crash Sensor”, page 40

⇒ “2.8 Overview - Driver Side and Passenger Side Curtain Airbag, Sedan”, page 41

⇒ “2.9 Overview - Deformation Elements”, page 42

⇒ “2.10 Overview - Driver Airbag”, page 50

2.1 Overview - Seat Belts

through 09/2000
⇒ “2.1.1 Overview - Front Seat Belts with Belt Tensioner”, page 30

from 10/2000
⇒ “2.1.2 Overview - Front Seat Belts with Belt Tensioner”, page 31

⇒ “2.1.3 Overview - Rear Seat Belts with Belt Tensioner”, page 32

⇒ “2.1.4 Overview - Rear Center Seat Belts”, page 34

2.1.1 Overview - Front Seat Belts with Belt Tensioner

> ⚠ WARNING
>
> *Belt tensioner units must be removed before starting any repairs.*

Protected by copyright. Copying for private or commercial purposes, in part or in whole, is not permitted unless authorised by Volkswagen AG. Volkswagen AG does not guarantee or accept any liability with respect to the correctness of information in this document. Copyright by Volkswagen AG.

1 - Belt Height Adjustment

- ❑ To remove height adjustment mechanism, upper B-pillar trim must be removed first

2 - Belt Relay

3 - Belt Guide

- ❑ 1.5 Nm
- ❑ Secured with 2 Phillips-head screws.

4 - Seat Belt with Belt Tensioner

- ❑ Trim of “lower B-pillar” and sill panel must be removed before removal. Refer to ⇒ “2.3.4 Lower B-Pillar Trim”, page 119 and ⇒ “2.4 Sill Panel Trim”, page 22 .
- ❑ Retaining tab determines position of automatic belt retractors
- ❑ By loosening automatic belt retractor bolt -6- belt tensioner is secured, and conversely made ready for function again.

5 - Front Belt Buckle

- ❑ Removing. Refer to ⇒ “4.1.1 Belt Buckle”, page 56

6 - Bolt

- ❑ 40 Nm

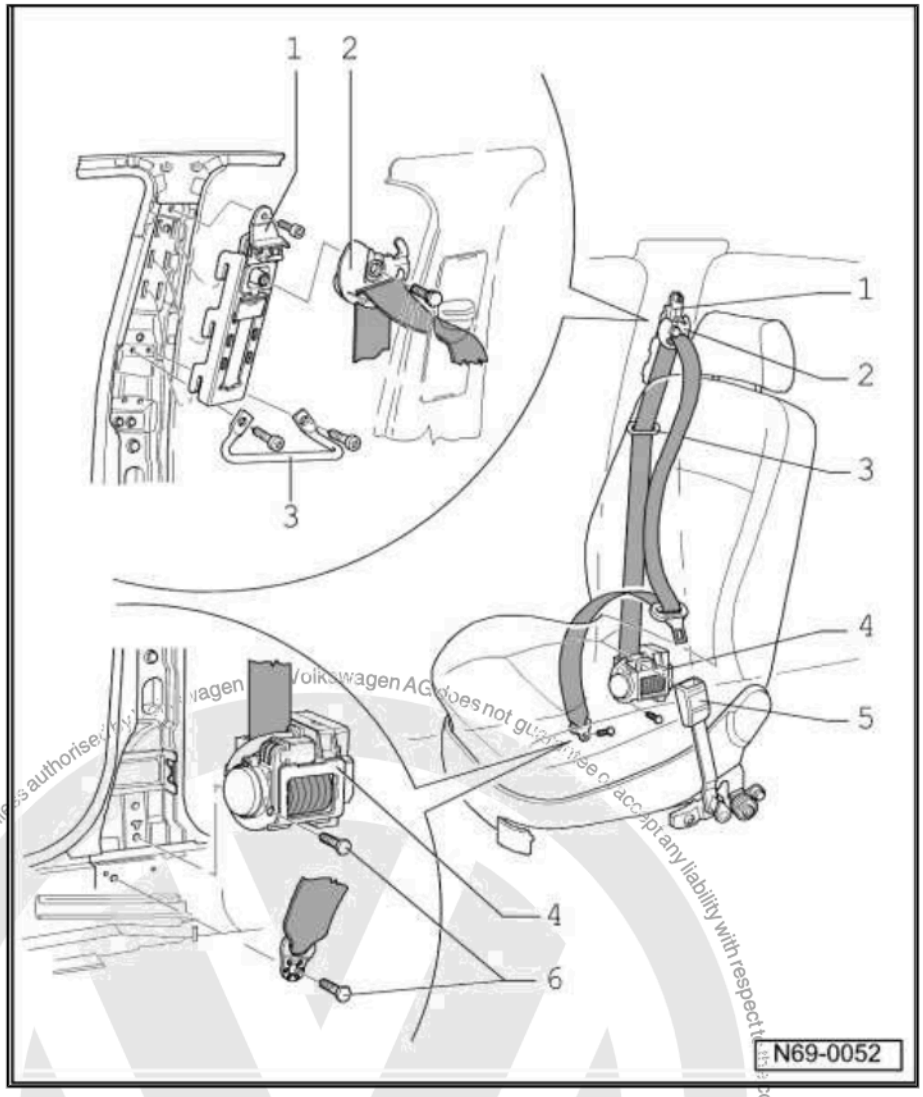

2.1.2 Overview - Front Seat Belts with Belt Tensioner

WARNING

Belt tensioner units must be removed before starting any repairs.

Protected by copyright. Copying for private or commercial purposes, in part or in whole, is not permitted unless authorised by Volkswagen AG. Volkswagen AG does not guarantee or accept any liability with respect to the correctness of information in this document. Copyright by Volkswagen AG.

1 - Belt Height Adjustment

- ❑ To remove height adjustment mechanism, upper B-pillar trim must be removed first

2 - Belt Relay

3 - Belt Guide

- ❑ 1.5 Nm
- ❑ Secured with 2 Phillips-head screws.

4 - Seat Belt with Belt Tensioner

- ❑ Trim of "lower B-pillar" and sill panel must be removed before removal. Refer to ⇒ "2.3.4 Lower B-Pillar Trim", page 119 and ⇒ "2.4 Sill Panel Trim", page 22 .
- ❑ Retaining tab determines position of automatic belt retractors
- ❑ By loosening automatic belt retractor bolt, belt tensioner is secured, and conversely made ready for function again.

5 - Front Belt Buckle

- ❑ Removing. Refer to ⇒ "4.1.1 Belt Buckle", page 56

6 - Bolt

- ❑ 40 Nm

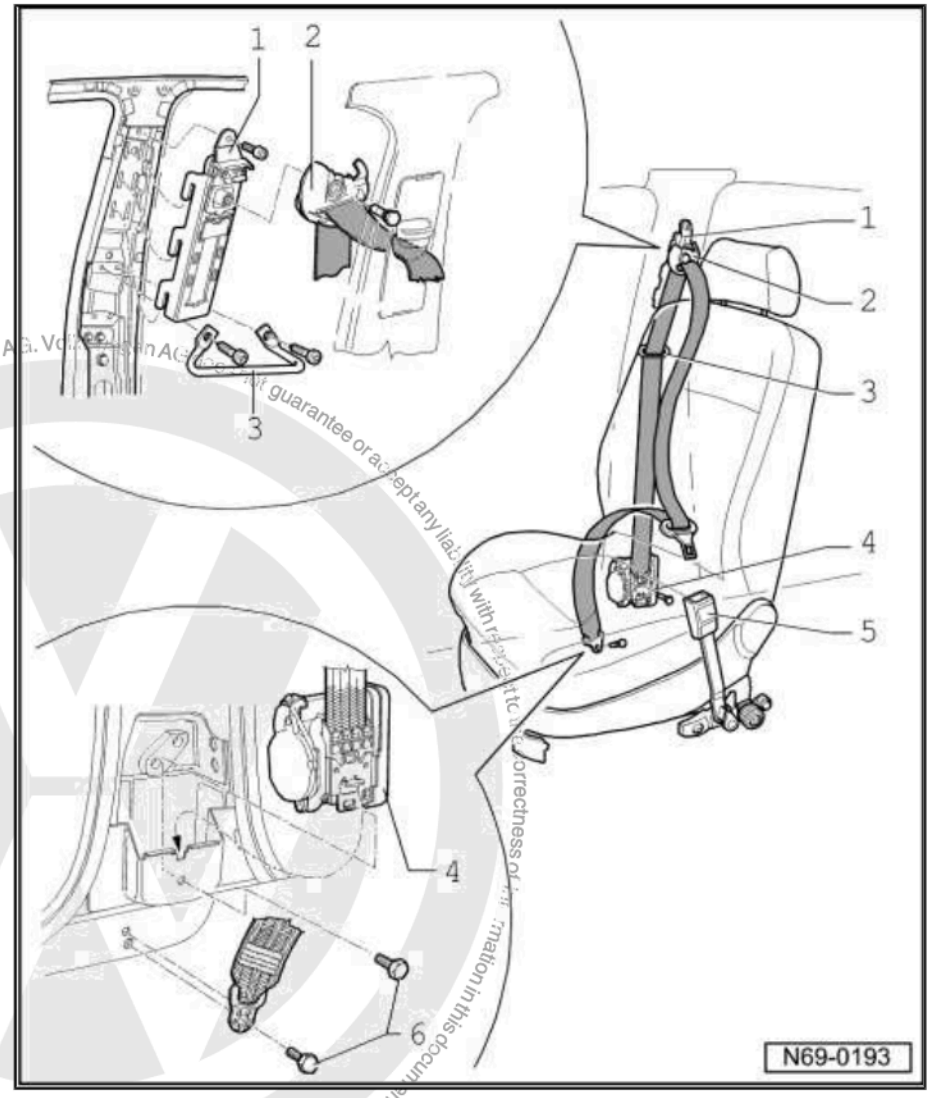

2.1.3 Overview - Rear Seat Belts with Belt Tensioner

WARNING

Belt tensioner units must be removed before starting any repairs.

WARNING

On the seatbelts with belt tensioner described in this chapter, there is the risk that not all ignition stages of the belt tensioner have ignited in a crash. Currently, there is no possibility to check this with workshop tools available. For this reason, these ignited seatbelts with belt tensioner are to be disposed of as belt tensioner units that have not ignited. Refer to ⇒ "1.3 Seat Belt Tensioner Disposal", page 28 .

1 - Seat Belt with Belt Tensioner
- ❑ Retaining tabs determine position of automatic belt retractors

2 - Bolts
- ❑ 40 Nm

3 - Unit Lock

4 - Belt Guide

5 - Screws
- ❑ 1.5 Nm

6 - Belt Webbing Guide

7 - Bolt
- ❑ 5 Nm
- ❑ This bolt is installed in Passat wagons only.

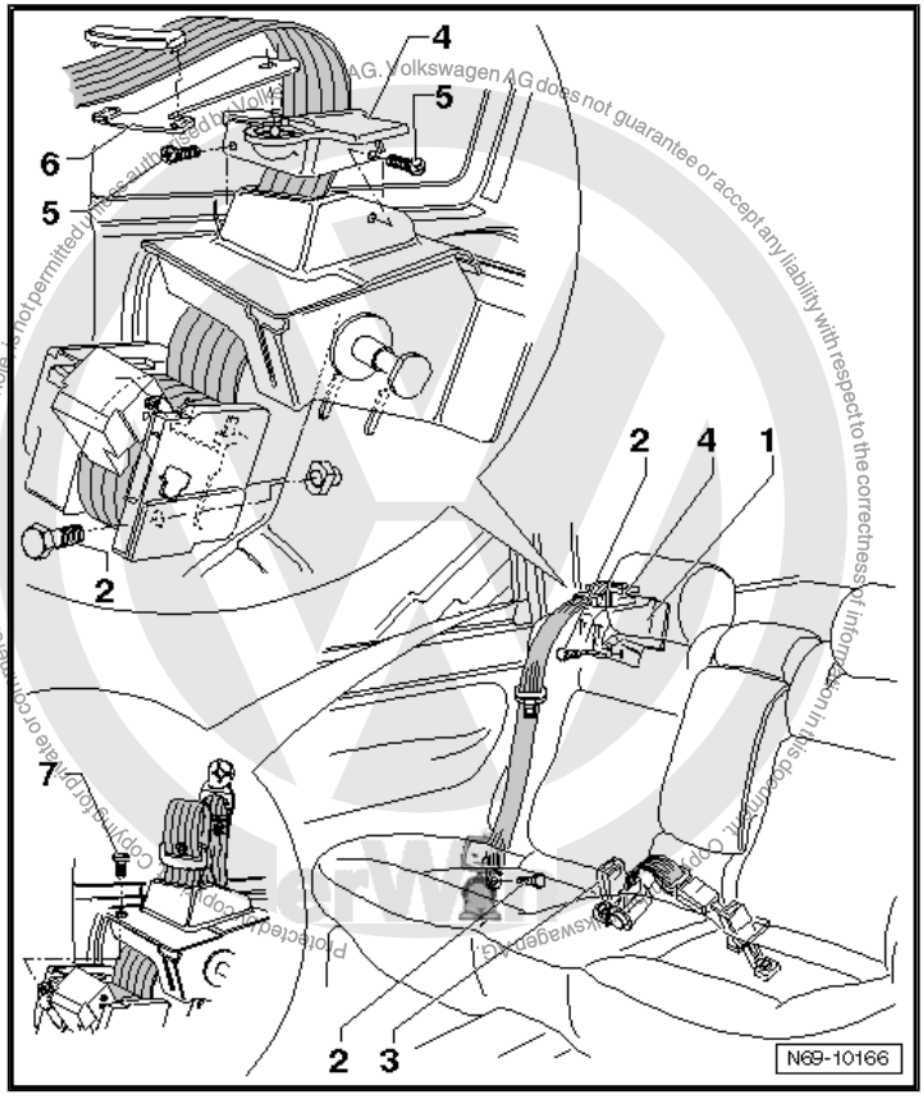

AG. Volkswagen AG does not guarantee or accept any liability with respect to the correctness of information in this document. Copyright by Volkswagen AG.
Protected by copyright. Copying for private or commercial purposes, in part or in whole, is not permitted unless authorised by Volkswagen AG.

2.1.4 Overview - Rear Center Seat Belts

1 - Belt Inertia Reel
- ❑ Removing. Refer to ⇒ "4.1.4 Automatic Belt Retractor", page 61

2 - Belt Webbing

3 - Belt Guide

4 - Bolt
- ❑ 40 Nm

5 - Belt Webbing Guide

6 - Cap

7 - Seatbelt Support
- ❑ Bolted to solid backrest only; on all other versions, backrest frame is welded to support for seatbelt

8 - Threaded Plate
- ❑ For solid backrest only; on all other versions a threaded pin is installed

9 - Bolts
- ❑ 40 Nm
- ❑ Solid backrest only

10 - Cushion

11 - Hex Nut
- ❑ Not with solid backrest

12 - Bolt
- ❑ 40 Nm
- ❑ Solid backrest only

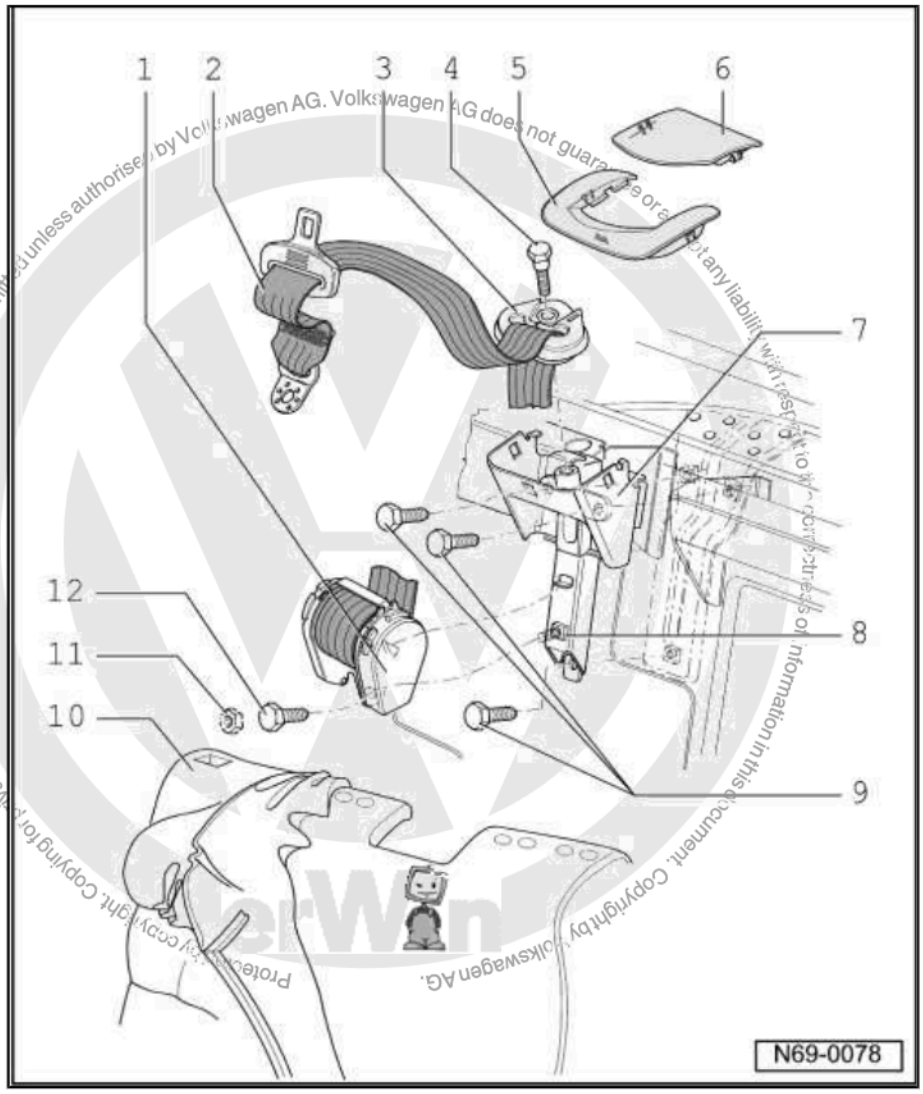

Protected by copyright. Copyright by Volkswagen AG.

2.2 Overview - Airbag Installation Locations

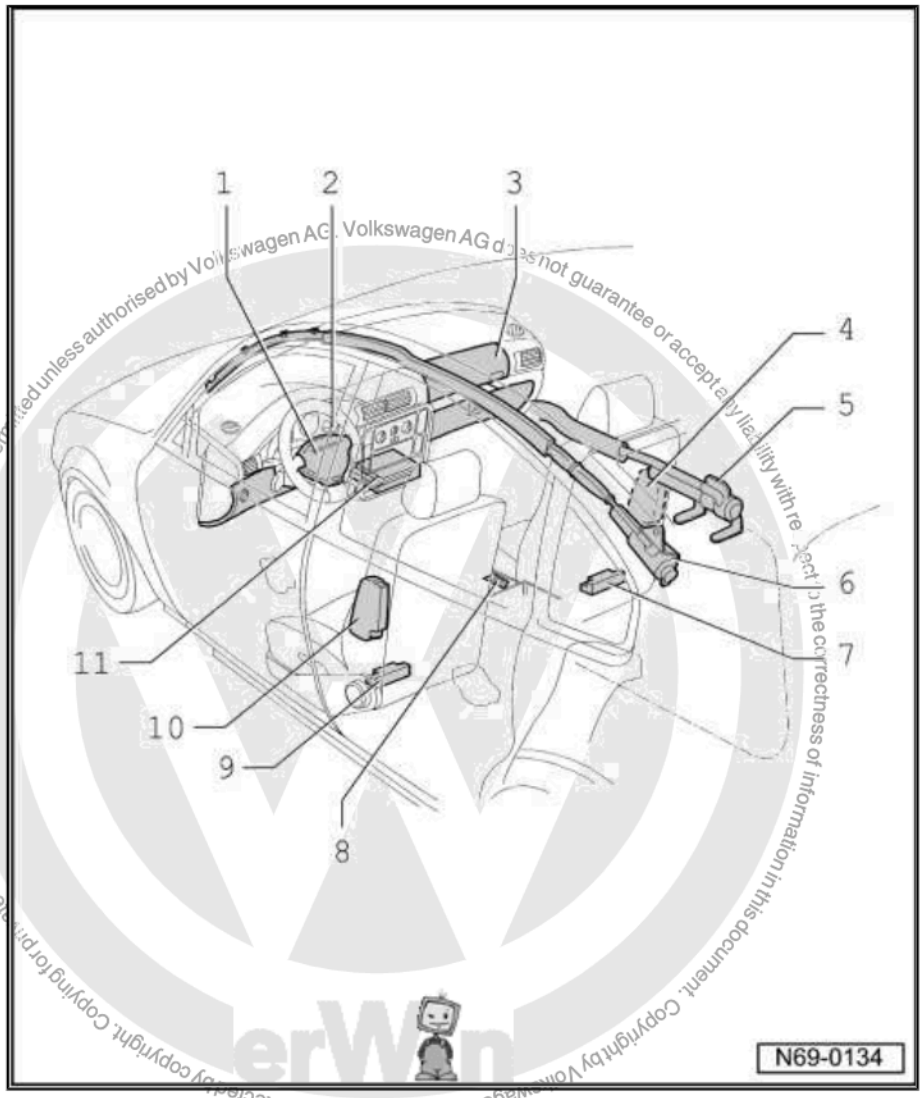

1 - Driver Airbag Unit
- ❑ Removing. Refer to ⇒ "4.7 Driver Airbag", page 70

2 - Airbag Indicator Lamp - K75-

3 - Front Passenger Airbag Unit
- ❑ Removing. Refer to ⇒ "2.5 Overview - Passenger Side Airbag", page 37
- ❑ Adapting components. Refer to ⇒ "3.2 Airbag Component Adapting", page 55

4 - Side Airbag, Front Passenger Side
- ❑ Removing. Refer to ⇒ "4.2 Driver and Passenger Side Airbag", page 63
- ❑ Adapting components. Refer to ⇒ "3.2 Airbag Component Adapting", page 55

5 - Driver/Passenger Side Curtain Airbag
- ❑ Wagon
- ❑ Removing. Refer to ⇒ "4.10 Driver/Passenger Side Curtain Airbag, Sedan", page 83

6 - Driver/Passenger Side Curtain Airbag
- ❑ Sedan
- ❑ Removing. Refer to ⇒ "4.10 Driver/Passenger Side Curtain Airbag, Sedan", page 83

7 - Side Airbag Crash Sensor, Passenger Side
- ❑ Removing. Refer to ⇒ "4.4 Driver and Passenger Side Airbag Crash Sensor", page 67

8 - Diagnostic Connector

9 - Side Airbag Crash Sensor, Driver Side
- ❑ Removing. Refer to ⇒ "4.4 Driver and Passenger Side Airbag Crash Sensor", page 67

10 - Side Airbag, Driver Side
- ❑ Removing. Refer to ⇒ "4.2 Driver and Passenger Side Airbag", page 63
- ❑ Adapting components. Refer to ⇒ "3.2 Airbag Component Adapting", page 55

11 - Airbag Control Module - J234-
- ❑ Removing. Refer to ⇒ "4.6 Airbag Control Module", page 69
- ❑ Adapting components (coding). Refer to ⇒ "3.2 Airbag Component Adapting", page 55

Protected by copyright. Copyright for private or commercial purposes, in part or in whole, is not permitted unless authorised by Volkswagen AG. Volkswagen AG does not guarantee or accept any liability with respect to the correctness of information in this document. Copyright by Volkswagen AG.

2.3 Overview - Airbag Installation Locations

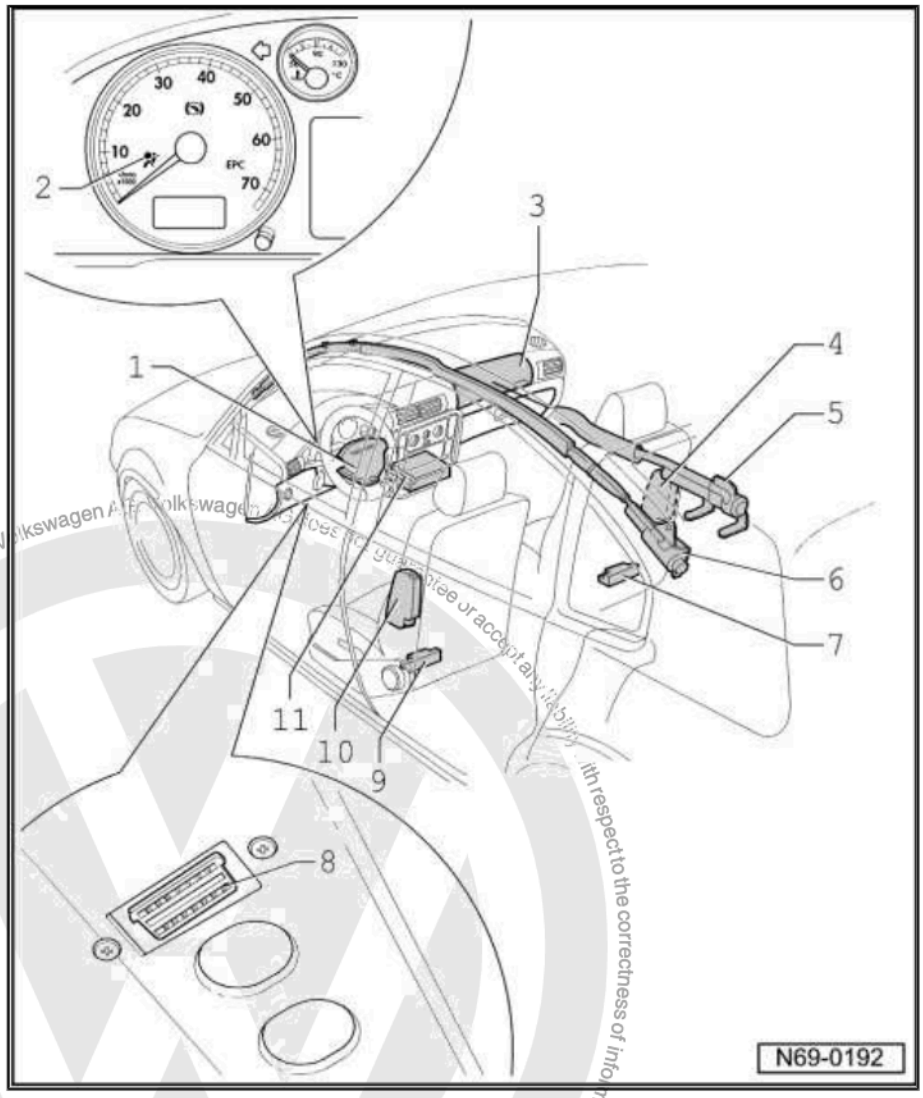

1 - Driver Airbag Unit
- ❑ Removing. Refer to ⇒ “4.7 Driver Airbag”, page 70

2 - Airbag Indicator Lamp - K75-

3 - Front Passenger Airbag Unit
- ❑ Removing. Refer to ⇒ “2.5 Overview - Passenger Side Airbag”, page 37
- ❑ Adapting components. Refer to ⇒ “3.2 Airbag Component Adapting”, page 55

4 - Side Airbag, Front Passenger Side
- ❑ Removing. Refer to ⇒ “4.2 Driver and Passenger Side Airbag”, page 63
- ❑ Adapting components. Refer to ⇒ “3.2 Airbag Component Adapting”, page 55

5 - Driver/Passenger Side Curtain Airbag
- ❑ Wagon
- ❑ Removing. Refer to ⇒ “4.10 Driver/Passenger Side Curtain Airbag, Sedan”, page 83

6 - Driver/Passenger Side Curtain Airbag
- ❑ Sedan
- ❑ Removing. Refer to ⇒ “4.10 Driver/Passenger Side Curtain Airbag, Sedan”, page 83

7 - Side Airbag Crash Sensor, Passenger Side
- ❑ Removing. Refer to ⇒ “4.4 Driver and Passenger Side Airbag Crash Sensor”, page 67

8 - Diagnostic Connector

9 - Side Airbag Crash Sensor, Driver Side
- ❑ Removing. Refer to ⇒ “4.4 Driver and Passenger Side Airbag Crash Sensor”, page 67

10 - Side Airbag, Driver Side
- ❑ Removing. Refer to ⇒ “4.2 Driver and Passenger Side Airbag”, page 63
- ❑ Adapting components. Refer to ⇒ “3.2 Airbag Component Adapting”, page 55

11 - Airbag Control Module - J234-
- ❑ Removing. Refer to ⇒ “4.6 Airbag Control Module”, page 69
- ❑ Adapting components (coding). Refer to ⇒ “3.2 Airbag Component Adapting”, page 55

Printed by copyright. Copyright by Volkswagen AG.

2.4 Airbag Units, Replacing after an Accident

Accident with Airbag Deployment

After replacing airbag units or airbag control module, labels (only tear-off strips) of new components must be attached to “registration card 2 for airbag systems”. “Send registration card 2 for airbag systems” relevant dealer or to Volkswagen of America for registration.

The registration card 000 010 227 C must be ordered separately.

Always replace the following components after an accident when airbag has deployed:

- All deployed airbag units with control modules and sensors.
- Support for passenger module where passenger airbag deployed.
- Return ring with slip ring, if driver's side airbag deployed.
- All seatbelts with belt tensioners that have been triggered.
- Seat covers and clips if side airbag is deployed
- If necessary (visual check) also replace the following: all damaged components.

Always replace the following components after an accident when side curtain airbag has deployed:

- All damaged pillars and trims.
- Door seal
- Headliner
- Grabhandle
- Connecting strip (for headliner)
- Rear reading light

Note

The Headliner, grab handle, reading light and connecting strip for headliner can be used up to 6 times.

Accident without Airbag Deployment

- If airbag Airbag Indicator Lamp - K75- does not indicate a DTC, airbag components do not need to be replaced. Check seatbelts separately.

After replacing the airbag units or the airbag control module, attach stickers (only tear-off strips) to the registration card and return the card to relevant dealer or to importer for registration.

The registration card 000 010 227 C must be ordered separately.

2.5 Overview - Passenger Side Airbag

Copyright by Volkswagen AG. Volkswagen AG does not guarantee or accept any liability with respect to the correctness of information in this document. Copying for private or commercial purposes, in part or in whole, not permitted unless authorized by Volkswagen AG.

1 - Front Passenger Airbag Unit

2 - Supports
- ❑ Always replace after air-bag has deployed.

3 - Bolt
- ❑ 4 Nm

4 - Connector

5 - Clips

6 - Hex Nut
- ❑ 4 Nm

7 - Cover

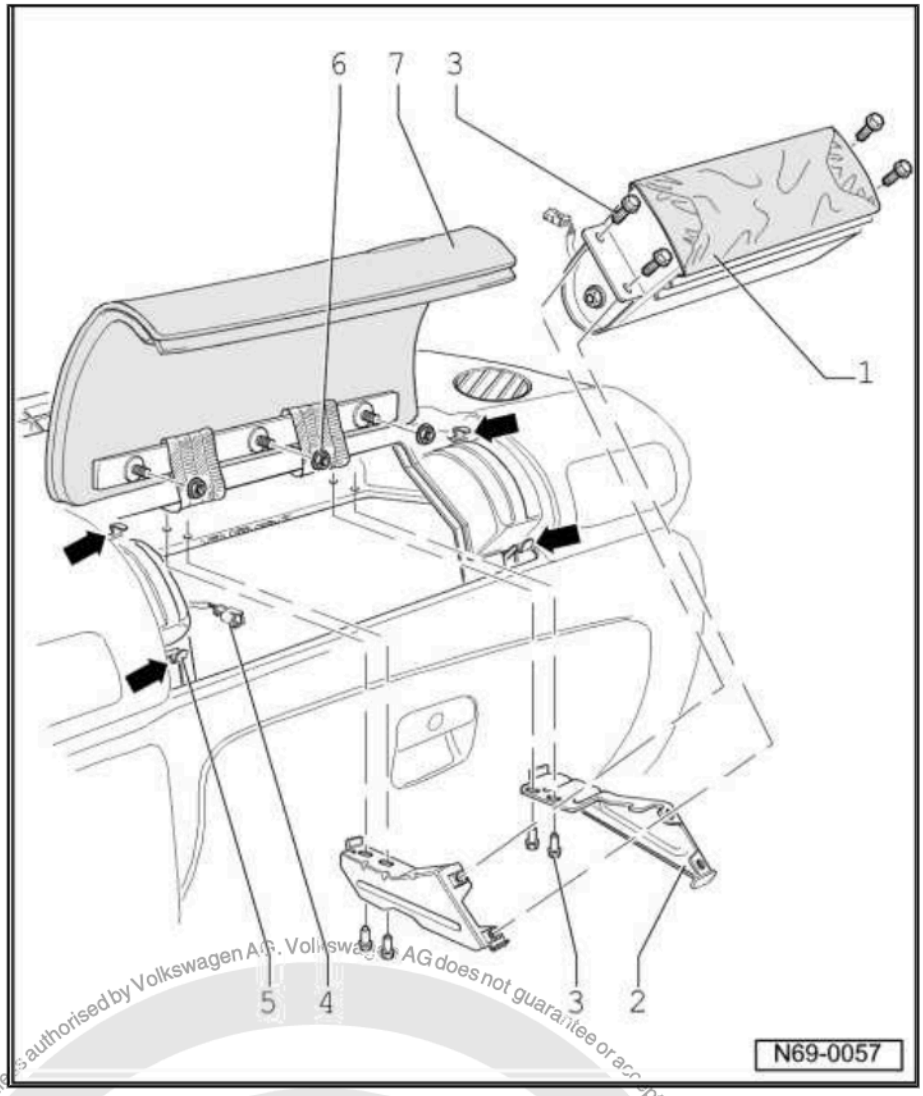

Protected by copyright. Copying for private or commercial purposes, in part or in whole, is not permitted unless authorised by Volkswagen AG. Volkswagen AG does not guarantee or accept any liability with respect to the correctness of information in this document. Copyright by Volkswagen AG.

2.6 Overview - Driver and Passenger Seat Side Airbag

1 - Side Airbag, Driver/Passenger Side

2 - Bolt
- ❑ 7 Nm

3 - Connector

4 - Backrest Frame

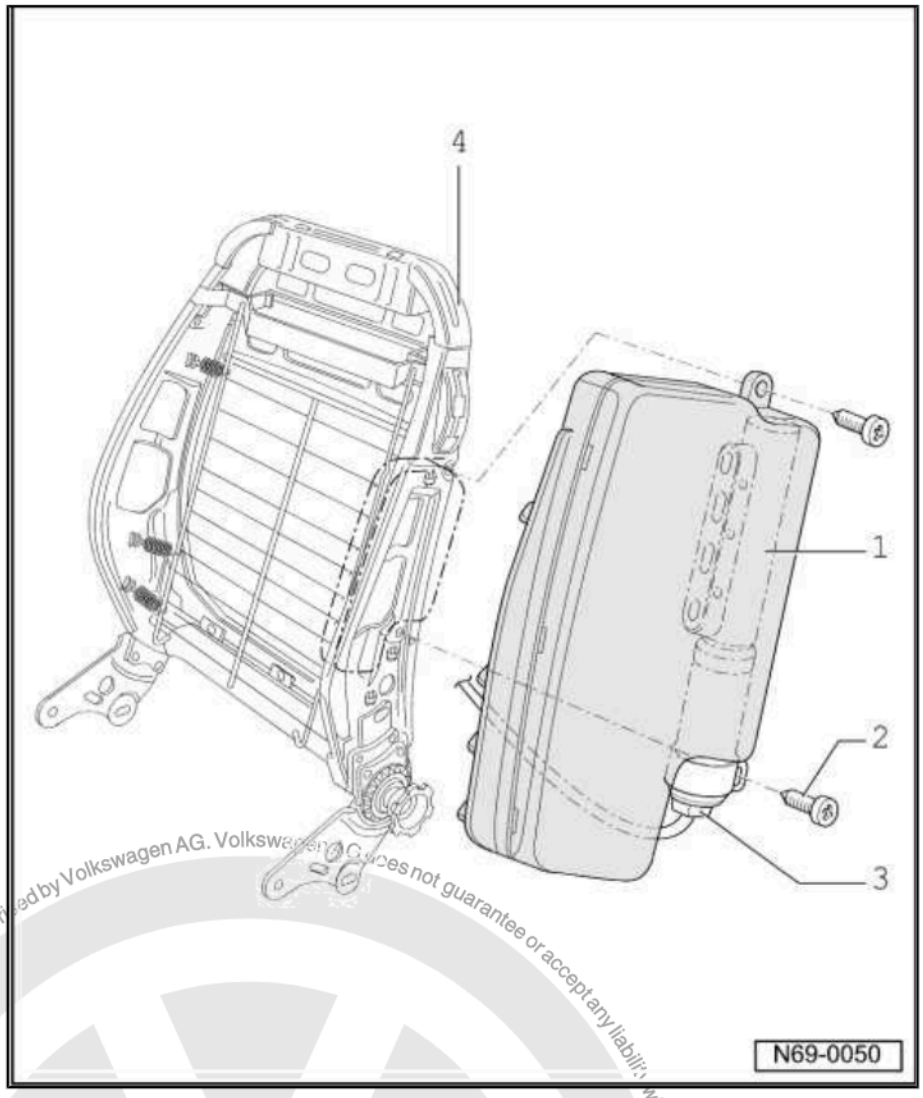

Protected by copyright. Copying for private or commercial purposes, in part or in whole, is not permitted unless authorised by Volkswagen AG. Volkswagen AG does not guarantee or accept any liability with respect to the correctness of information in this document. Copyright by Volkswagen AG.

2.7 Overview - Driver and Passenger Side Airbag Crash Sensor

1 - Driver/Passenger Sensor

2 - Connector

3 - Bolt
- ❑ 6 Nm

4 - Carpet

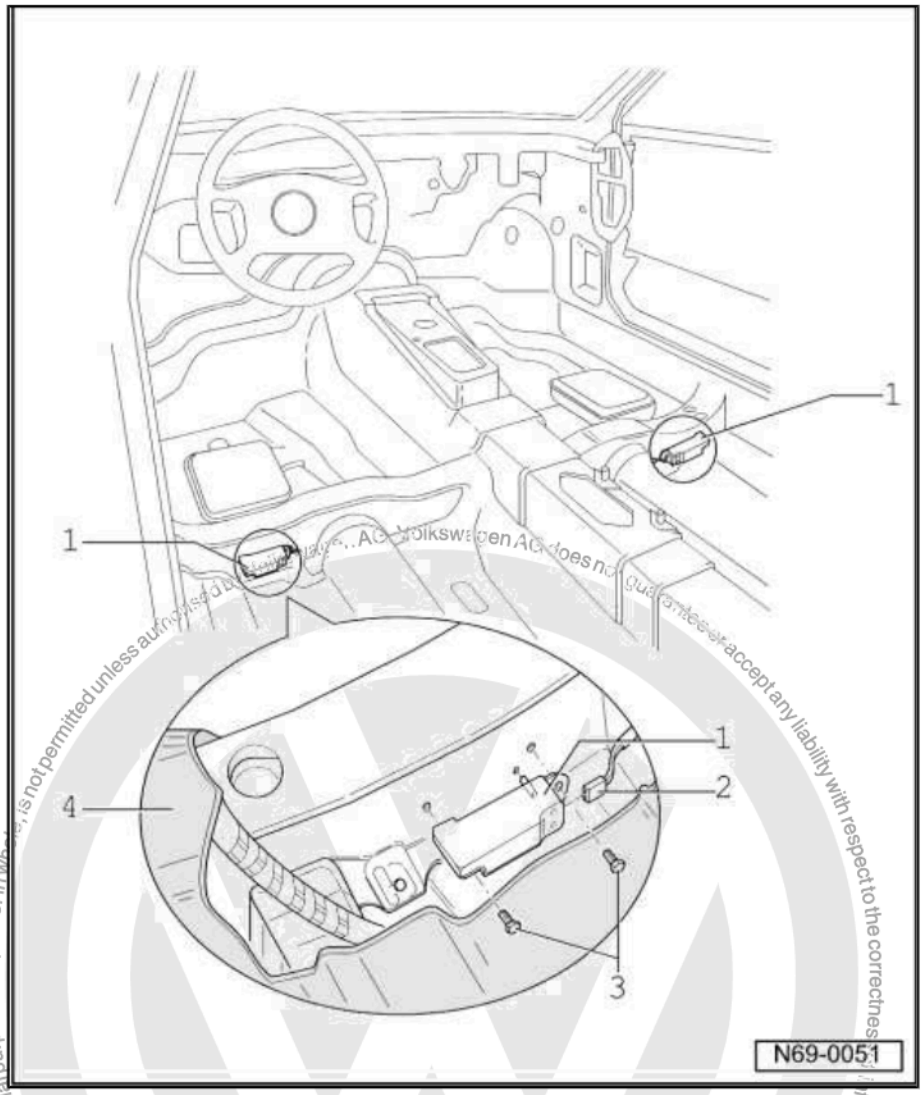

Protected by copyright. Copying for private or commercial purposes, in part or in whole, is not permitted unless authorised by Volkswagen AG. Volkswagen AG does not guarantee or accept any liability with respect to the correctness of information in this document. Copyright by Volkswagen AG.

2.8 Overview - Driver Side and Passenger Side Curtain Airbag, Sedan

1 - Side Curtain Airbag

2 - Bolts
- ❑ 3 Nm
- ❑ Sheet metal screws

3 - Bolts
- ❑ 3 Nm
- ❑ Bolts with metric thread

4 - Connector

5 - C-pillar Trim (Upper Part)
- ❑ Removing. Refer to ⇒ "2.3.5 Upper C/D-Pillar Trim, Sedan", page 120

6 - C-pillar Trim (Lower Part)
- ❑ Removing. Refer to ⇒ "2.3.5 Upper C/D-Pillar Trim, Sedan", page 120

7 - Upper B-pillar Trim
- ❑ Removing. Refer to ⇒ "2.3.3 Upper B-Pillar Trim", page 115

8 - Upper A-pillar Trim
- ❑ Removing. Refer to ⇒ "2.3.1 Upper A-Pillar Trim", page 112

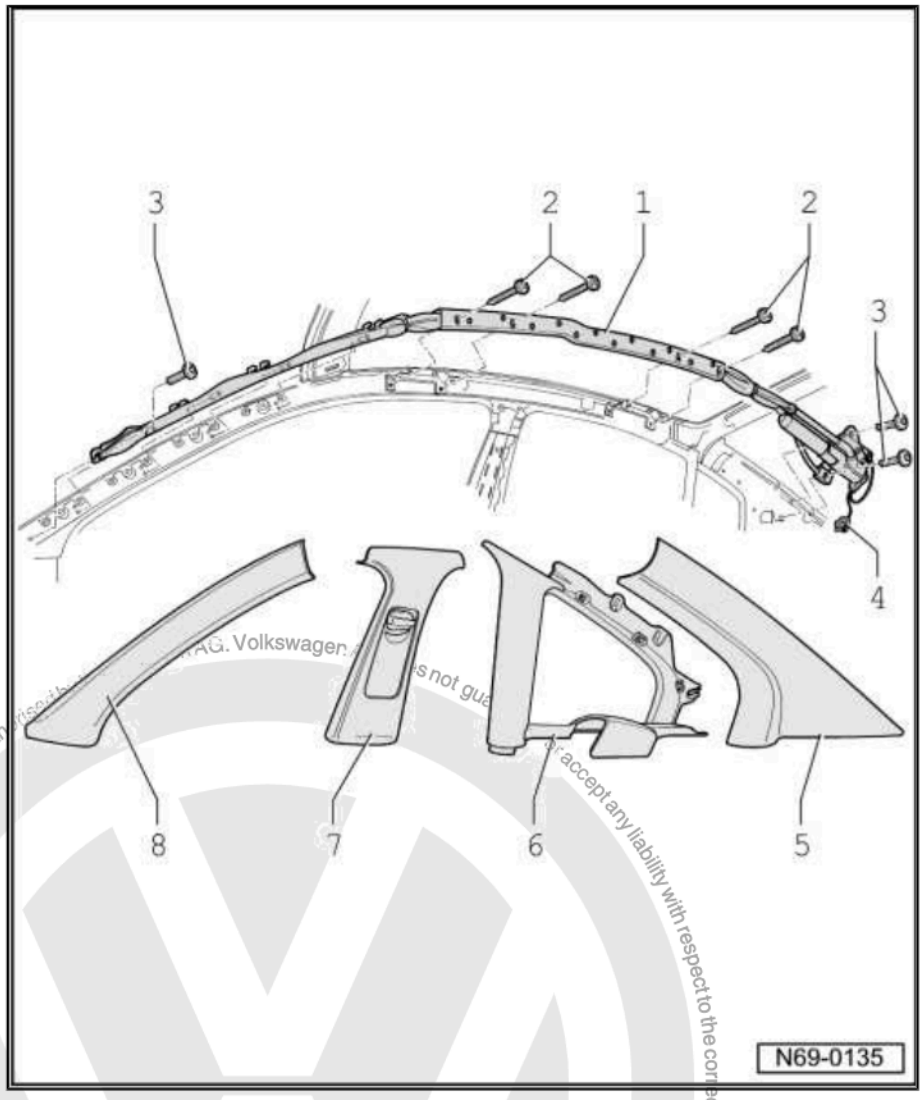

Protected by copyright. Copying for private or commercial purposes, in part or in whole, is not permitted unless authorised by Volkswagen AG. Volkswagen AG does not guarantee or accept any liability with respect to the correctness of information in this document. Copyright by Volkswagen AG.

2.9 Overview - Deformation Elements

⇒ “2.9.1 Overview - Side, Sedan without Sunroof”, page 42

⇒ “2.9.2 Overview - Headliner, Sedan without Sunroof”, page 43

⇒ “2.9.3 Overview - Headliner, Sedan with Sunroof”, page 44

⇒ “2.9.4 Overview - C-Pillar Deformation Elements, Sedan”, page 45

⇒ “2.9.5 Overview - Tilt/Slide Sunroof Installation Unit”, page 46

⇒ “2.9.6 Overview - Side Curtain Airbag, Sedan without Sunroof”, page 47

⇒ “2.9.7 Overview - Side Deformation Elements, Wagon without Sunroof”, page 48

⇒ “2.9.8 Overview - Headliner, Wagon with Sunroof”, page 49

2.9.1 Overview - Side, Sedan without Sunroof

1 - Inner Roof Pillar

2 - Internally Threaded Pop Rivet
- ❑ Quantity: 5
- ❑ Tighten using Pop Rivet Pliers - VAG1765B-

3 - Bolt
- ❑ 3 Nm
- ❑ Quantity: 5

4 - Deformation Element

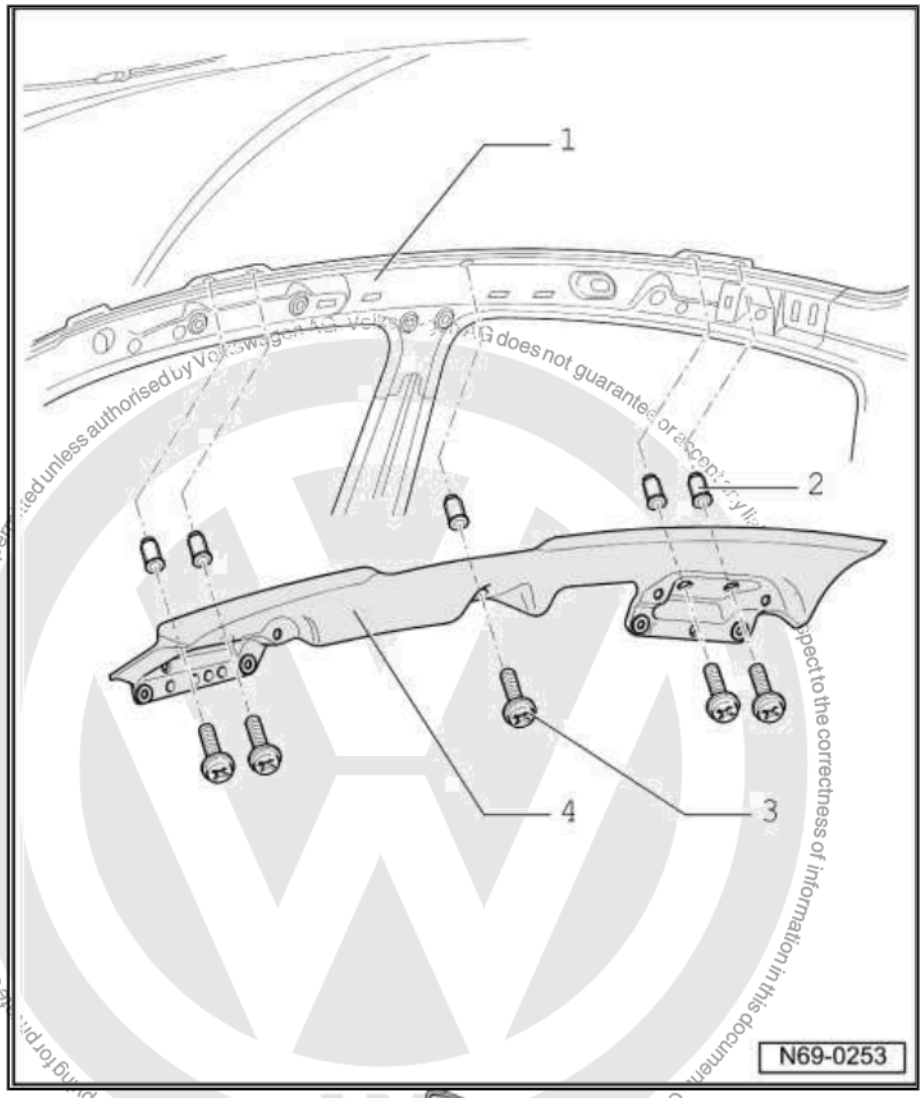

Protected by copyright. Copyright by Volkswagen AG.

2.9.2 Overview - Headliner, Sedan without Sunroof

1 - Headliner

2 - Rear Deformation Elements
- ❑ Quantity: 2

3 - Front Deformation Elements
- ❑ Quantity: 2

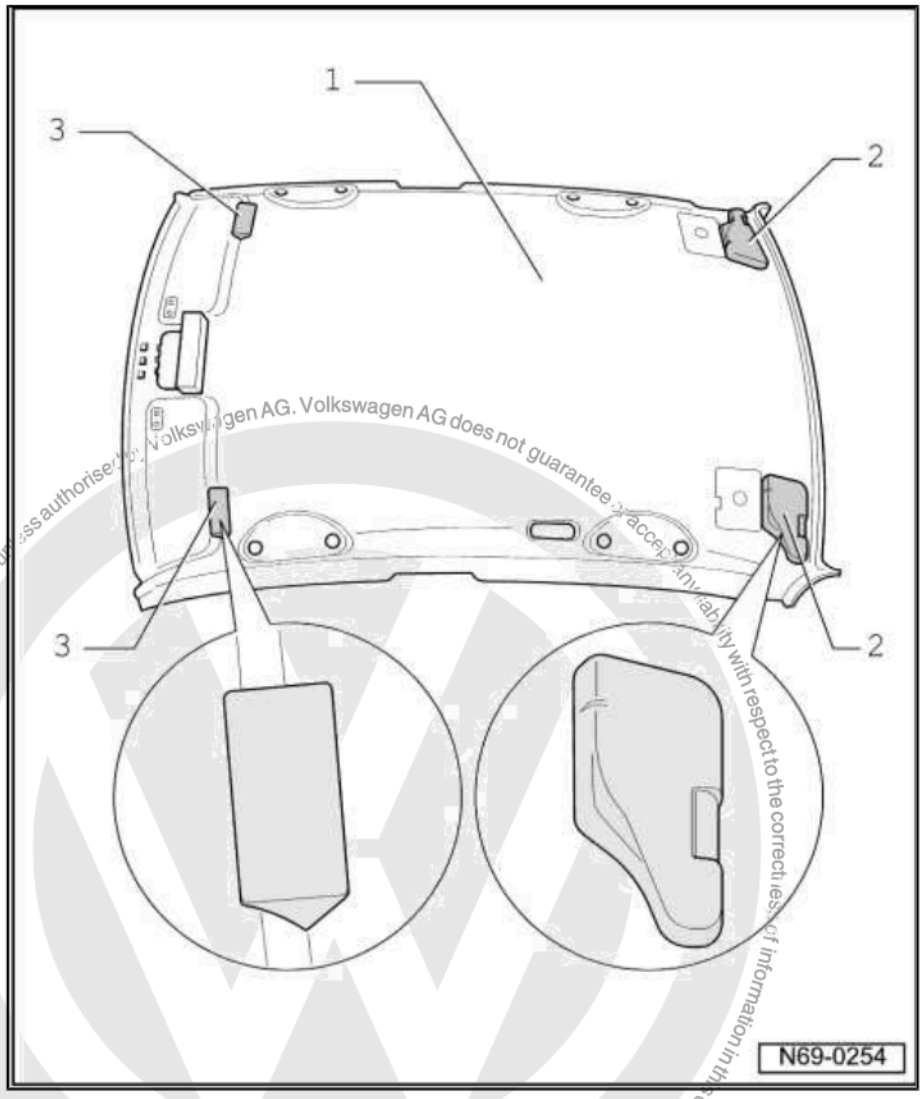

Protected by copyright. Copying for private or commercial purposes, in part or in whole, is not permitted unless authorised by Volkswagen AG. Volkswagen AG does not guarantee or accept any liability with respect to the correctness of information in this document. Copyright by Volkswagen AG.

2.9.3 Overview - Headliner, Sedan with Sunroof

1 - Headliner

2 - Rear Deformation Elements
- ❑ Quantity: 2

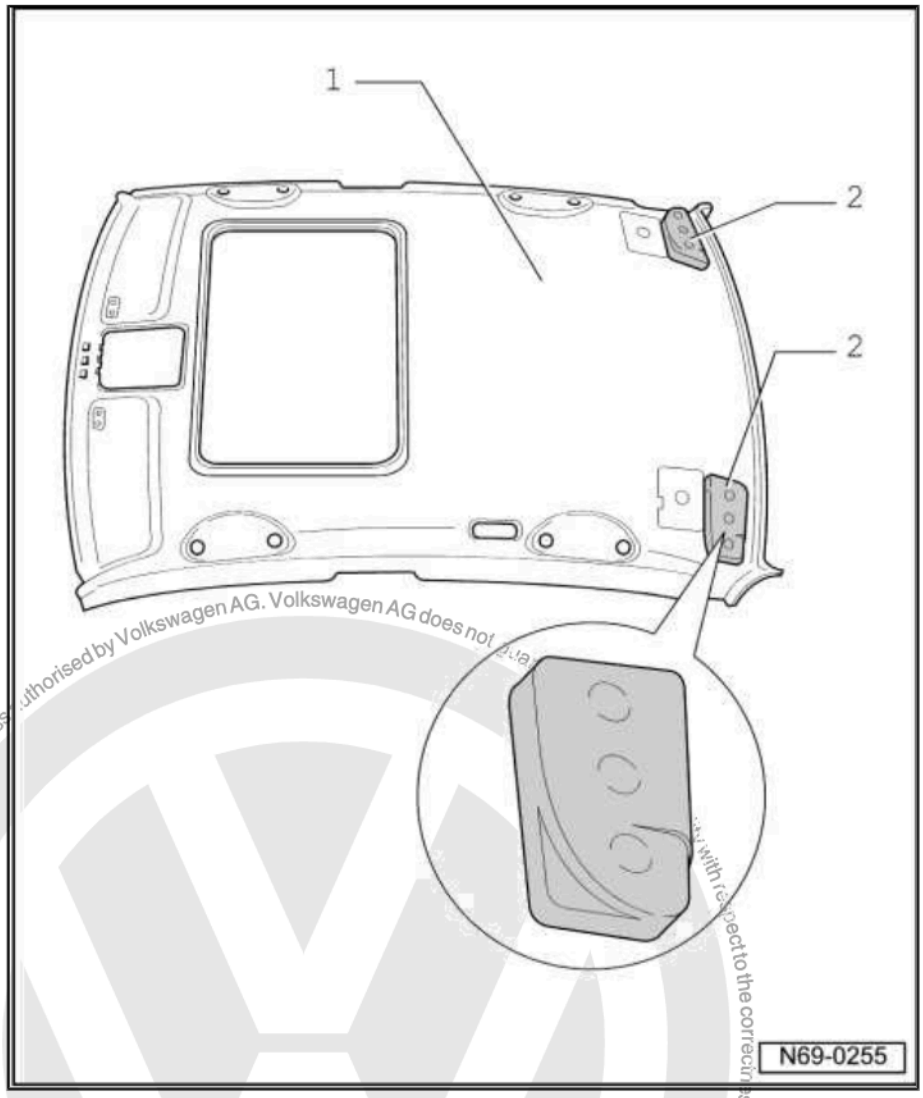

Protected by copyright. Copying for private or commercial purposes, in part or in whole, is not permitted unless authorised by Volkswagen AG. Volkswagen AG does not guarantee or accept any liability with respect to the correctness of information in this document. Copyright by Volkswagen AG.

2.9.4 Overview - C-Pillar Deformation Elements, Sedan

1 - Deformation Element

2 - Bolt
- ❑ 3 Nm
- ❑ Quantity: 2

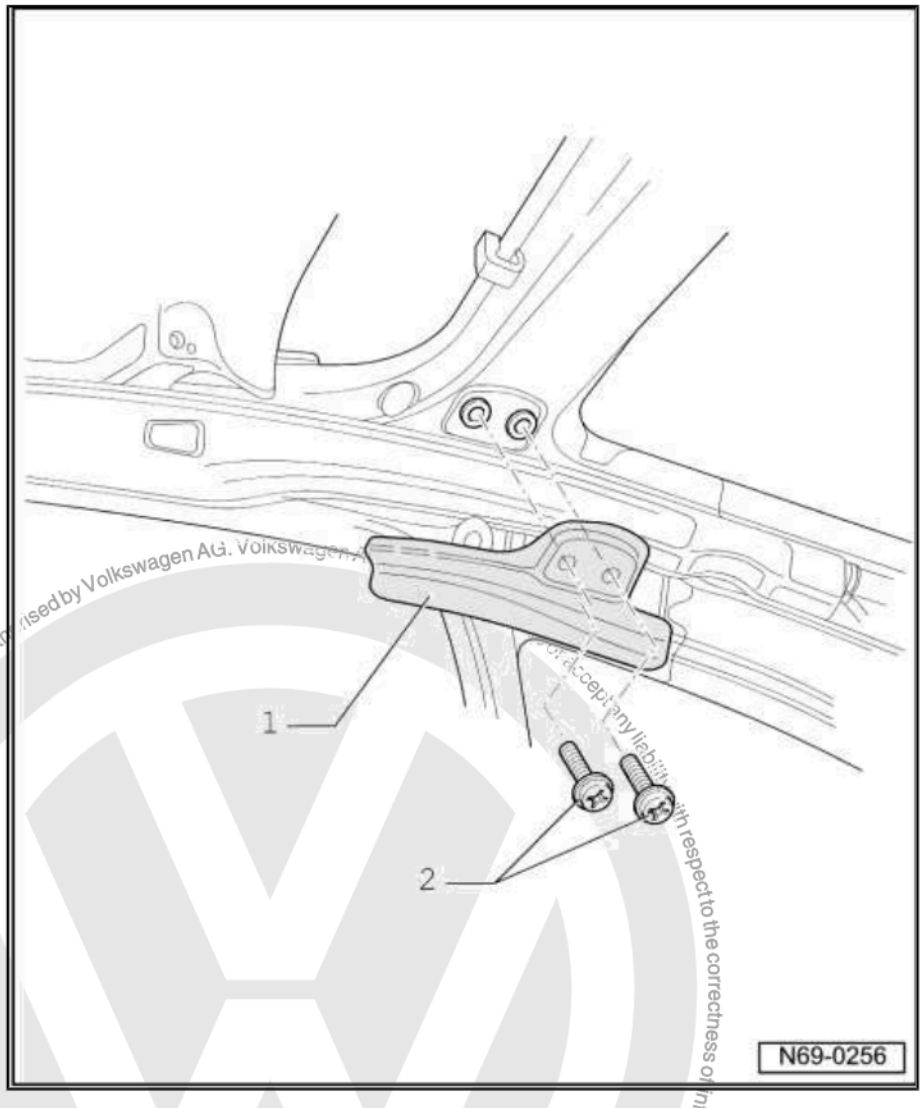

Protected by copyright. Copying for private or commercial purposes, in part or in whole, is not permitted unless authorised by Volkswagen AG. Volkswagen AG accepts no liability with respect to the correctness of information in this document. Copyright by Volkswagen AG.

2.9.5 Overview - Tilt/Slide Sunroof Installation Unit

1 - Deformation Element
- ❑ Quantity: 2
- ❑ Self-adhesive

2 - Slide/Tilt Sunroof Installation Unit

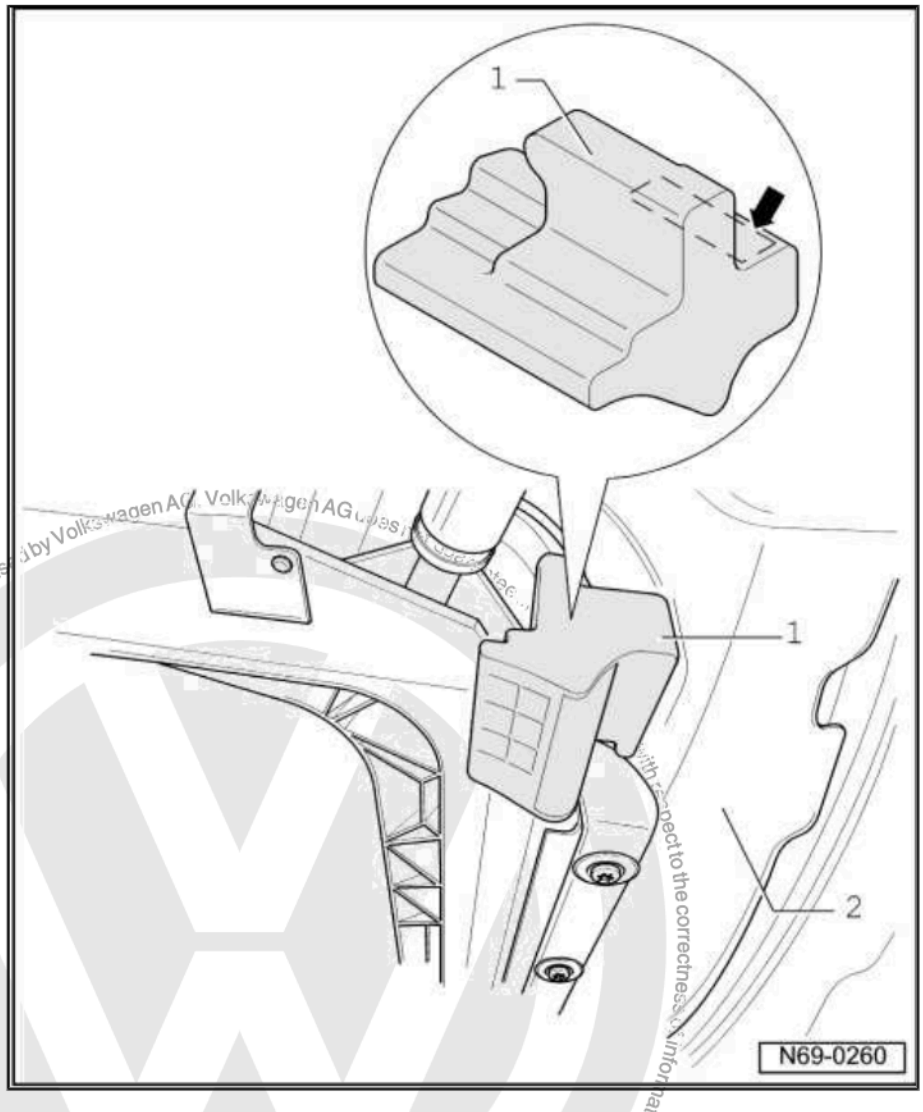

Protected by copyright. Copying for private or commercial purposes, in part or in whole, is not permitted unless authorised by Volkswagen AG. Volkswagen AG does not guarantee or assume any liability with respect to the correctness of information in this document. Copyright by Volkswagen AG.

2.9.6 Overview - Side Curtain Airbag, Sedan without Sunroof

1 - Deformation Element

2 - Bolt
- ❑ 3 Nm
- ❑ Quantity: 2

3 - Side Curtain Airbag

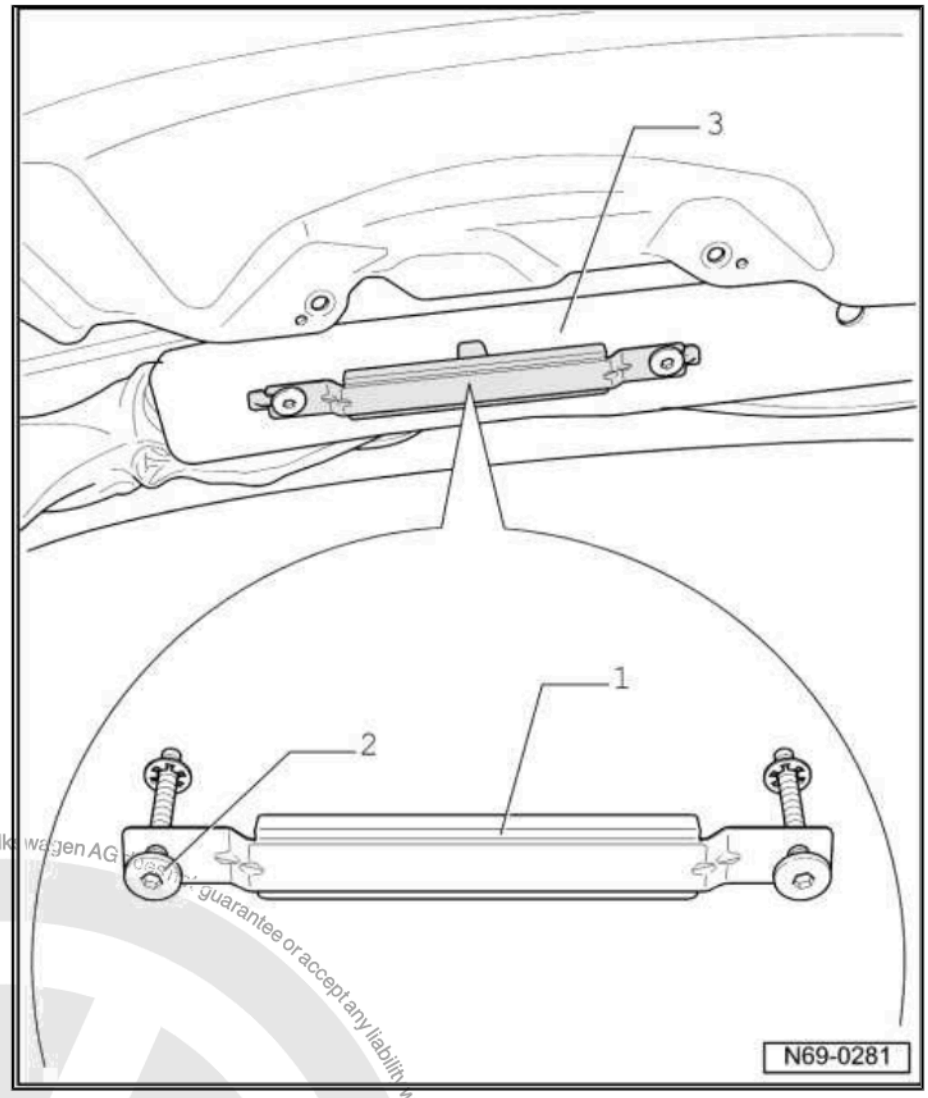

Protected by copyright. Copyright for private or commercial purposes, in part or in whole, is not permitted unless authorised by Volkswagen AG. Volkswagen AG does not guarantee or accept any liability with respect to the correctness of information in this document. Copyright by Volkswagen AG.

2.9.7 Overview - Side Deformation Elements, Wagon without Sunroof

1 - Inner Roof Pillar

2 - Internally Threaded Pop Rivet
- ❑ Quantity: 6
- ❑ Tighten using Pop Rivet Pliers - VAG1765B-

3 - Bolt
- ❑ 3 Nm
- ❑ Quantity: 6

4 - Deformation Element

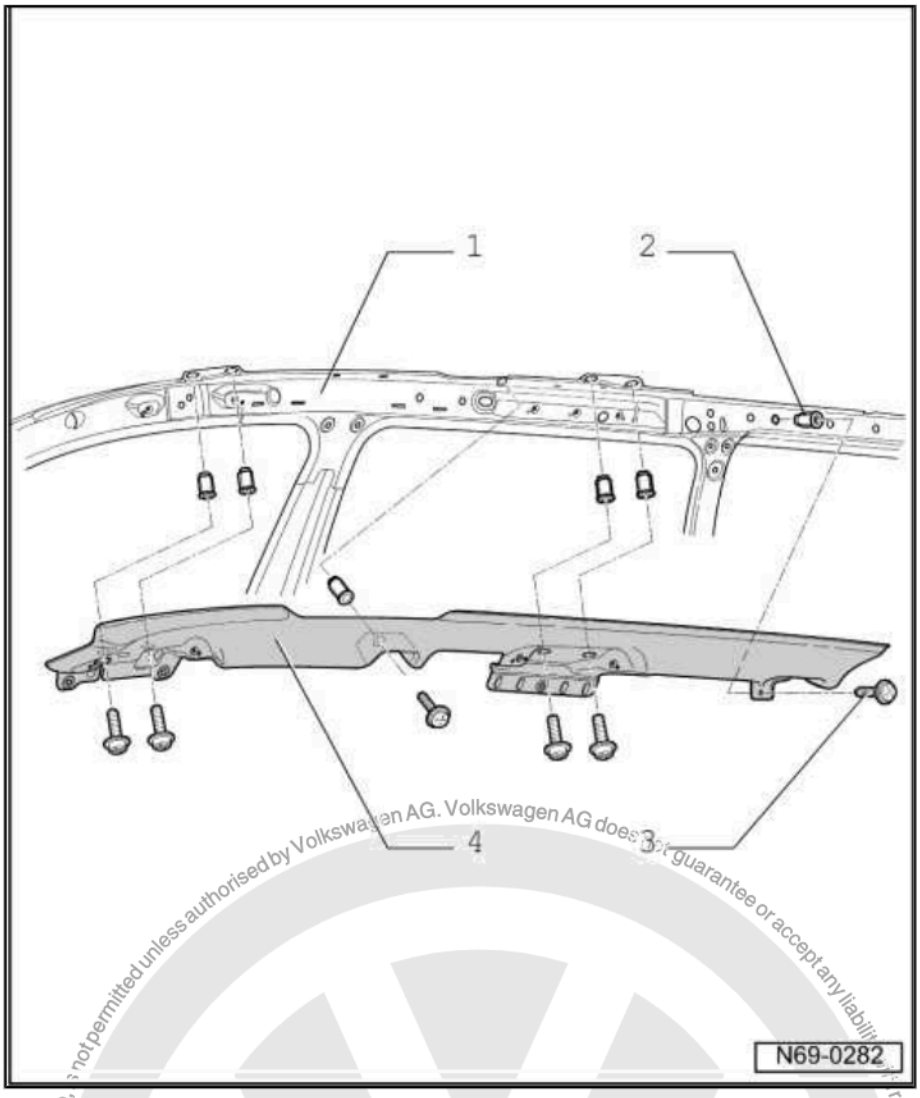

Protected by copyright. Copying for private or commercial purposes, in part or in whole, is not permitted unless authorised by Volkswagen AG. Volkswagen AG does not guarantee or accept any liability with respect to the correctness of information in this document. Copyright by Volkswagen AG.

2.9.8 Overview - Headliner, Wagon with Sunroof

1 - Headliner

2 - Rear Deformation Elements
- ❑ Quantity: 2

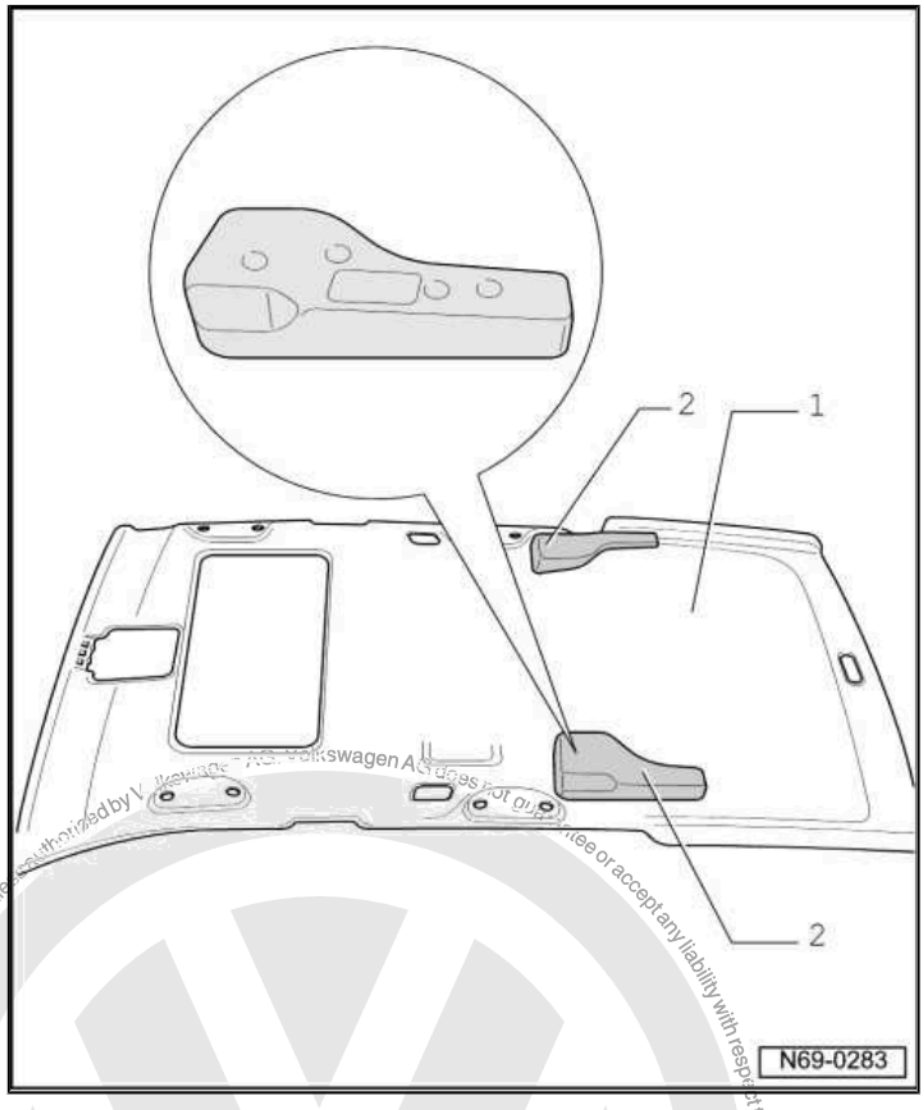

Protected by copyright. Copying for private or commercial purposes, in part or in whole, is not permitted unless authorized by Volkswagen AG. Volkswagen AG does not guarantee or accept any liability with respect to the correctness of information in this document. Copyright by Volkswagen AG.

2.10 Overview - Driver Airbag

⇒ “2.10.1 Overview - Four-Spoke Steering Wheel”, page 50

Except W8
⇒ “2.10.2 Overview - Three-Spoke Steering Wheel”, page 51

2.10.1 Overview - Four-Spoke Steering Wheel

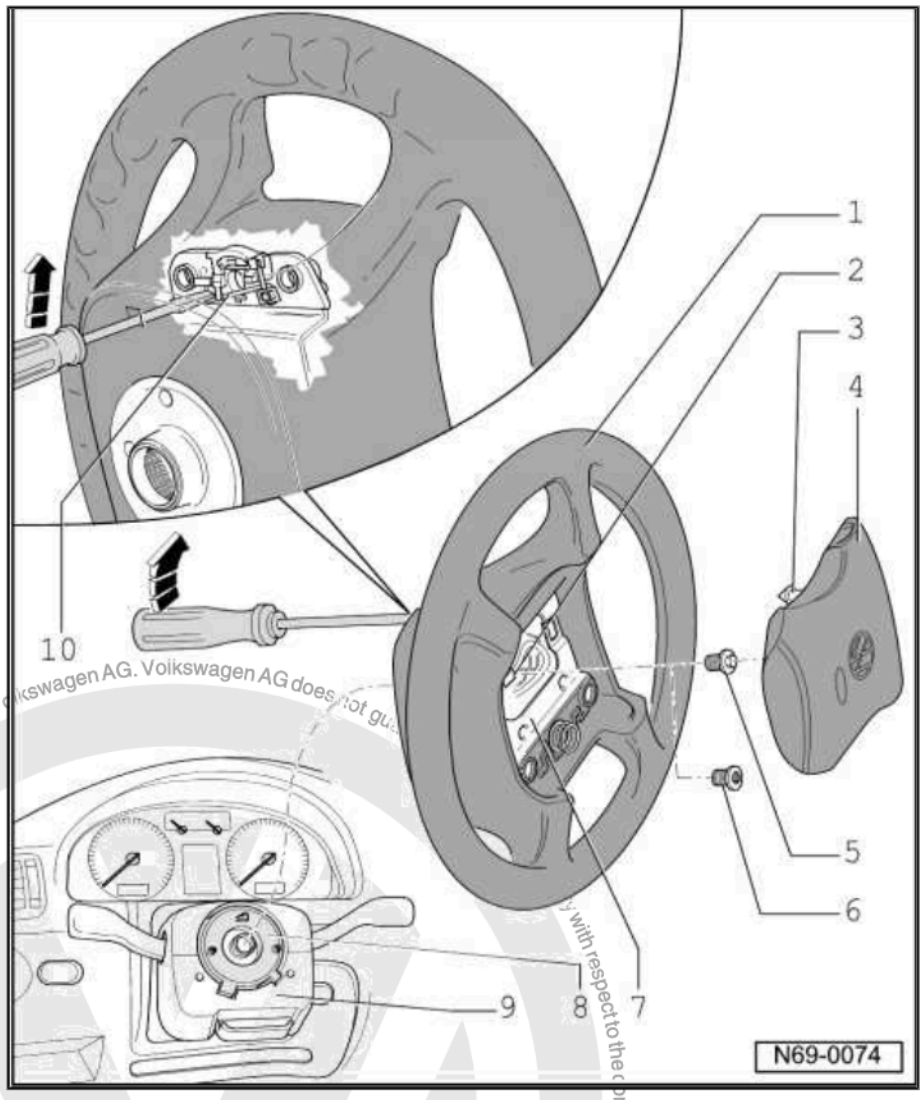

1 - Steering Wheel
- ❑ Removing. Refer to ⇒ “4.8 Steering Wheel”, page 79

2 - Connector

3 - Catches
- ❑ Are released from back of steering wheel

4 - Airbag Unit
- ❑ Because of the differing engaging mechanisms, only steering wheels and airbag units from same supplier can be installed.
- ❑ For vehicles equipped with wooden steering wheel, airbag unit is bolted to steering wheel.
- ❑ Removing. Refer to ⇒ “4.7.1 Four-Spoke Steering Wheel”, page 70

5 - Bolt
- ❑ 75 Nm
- ❑ Discontinued shortly after start of production

After current supplies are exhausted, only socket head bolts --item 6- ⇒ Item 6 (page 50) - are available as a replacement part

6 - Bolt
- ❑ 60 Nm
- ❑ Coated with locking compound
- ❑ May be used up to five times

Press in a punch indentation after each installation

7 - Securing Plate

8 - Coil Connector with Slip Ring

9 - Trim

10 - Clips

Protected by copyright. Copying for private or commercial purposes, in part or in whole, is not permitted unless authorised by Volkswagen AG. Volkswagen AG does not guarantee or accept any liability with respect to the correctness of information in this document. Copyright by Volkswagen AG.

2.10.2 Overview - Three-Spoke Steering Wheel

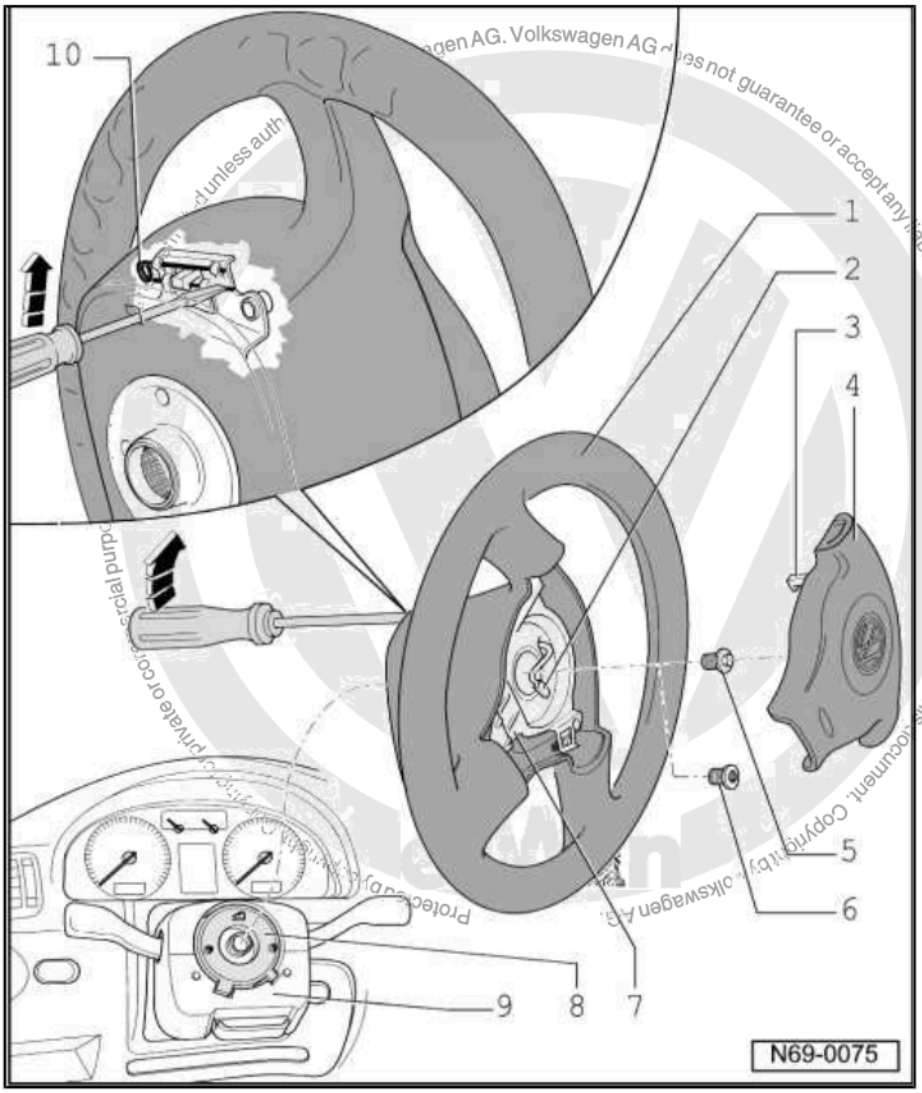

1 - Steering Wheel
- ❑ Removing. Refer to ⇒ "4.8 Steering Wheel", page 79

2 - Connector

3 - Catches
- ❑ Are released from back of steering wheel

4 - Airbag Unit
- ❑ Because of the differing engaging mechanisms, only steering wheels and airbag units from same supplier can be installed.
- ❑ Removing. Refer to ⇒ "4.7.2 Three-Spoke Steering Wheel", page 73

5 - Bolt
- ❑ 75 Nm
- ❑ Discontinued shortly after start of production

After current supplies are exhausted, only socket head bolts --item 6- ⇒ Item 6 (page 51) - are available as a replacement part

6 - Bolt
- ❑ 60 Nm
- ❑ Coated with locking compound
- ❑ May be used up to five times

Press in a punch indentation after each installation

7 - Securing Plate

8 - Coil Connector with Slip Ring

9 - Trim

10 - Clips

Copyright by Volkswagen AG. Volkswagen AG does not guarantee or accept any liability with respect to the correctness of information in this document. Copying for private or commercial purposes, in whole or in part, is not permitted unless authorized by Volkswagen AG. Protected by copyright.

3 Diagnosis and Testing

⇒ “3.1 Seat Belts, Inspecting”, page 52

⇒ “3.2 Airbag Component Adapting”, page 55

⇒ “3.3 LATCH Child Seat Anchors, Inspecting after an Accident”, page 55

3.1 Seat Belts, Inspecting

⇒ “3.1.1 General Information”, page 52

⇒ “3.1.2 Belt Webbing, Checking”, page 52

⇒ “3.1.3 Retractor, Checking Locking Function”, page 53

⇒ “3.1.4 Belt Latch, Inspection”, page 54

⇒ “3.1.5 Belt Latch, Checking”, page 54

⇒ “3.1.6 Belt Guide Rings and Locking Tongue, Checking”, page 54

⇒ “3.1.7 Securing Components and Anchorage Points, Checking”, page 55

3.1.1 General Information

WARNING

After every accident the seat belt system must be inspected systematically! If damage is determined when inspecting the check points, customer must be informed regarding necessity of changing belts.

Inspection Points

- Belt Webbing, Checking
- Retractor, Checking Locking Function
- Belt Latch, Visual Inspection
- Belt Latch, Checking Function
- Belt Guide Rings and Locking Tongue, Checking
- Securing Components and Anchorage Points, Checking
- Check lap belt automatic belt retractor

Note

If customer refuses to have a damaged seat belt replaced, appropriate note should be made.

3.1.2 Belt Webbing, Checking

– Pull belt completely out of retractor or lap belt adjustment tongue.

– Inspect belt webbing for contamination and, if necessary, wash with mild soap solution ⇒ also refer to Operating Manual.

Copyright by Volkswagen AG. Volkswagen AG does not guarantee or accept any liability with respect to the correctness of information in this document. Copyright by Volkswagen AG. Protected by copyright. Commercial purposes, in part or in whole, is not permitted unless authorized by Volkswagen AG.

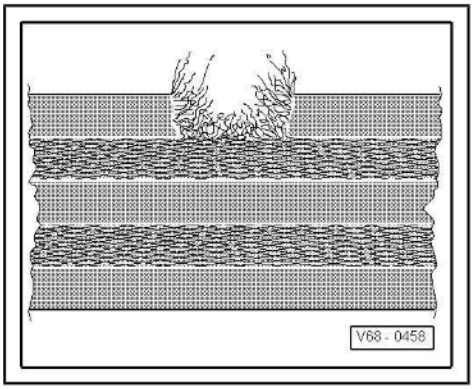

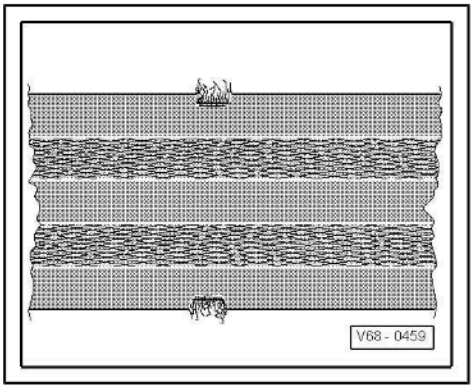

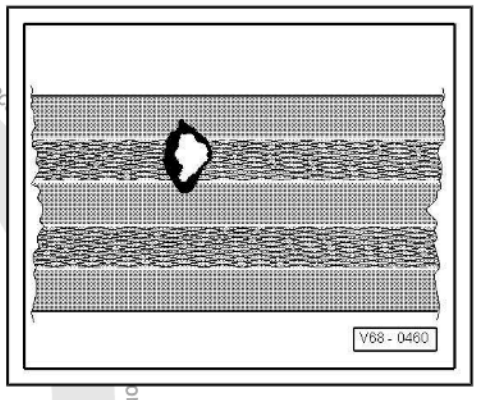

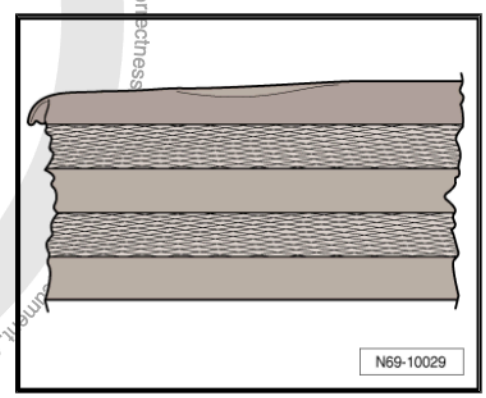

- If one of the types of damage (1 or 2) shown in the following is detected on a vehicle which has been in an accident - seatbelt must be replaced completely with seat belt latch and seatbelt height adjuster.
- If one kind of damage under points 1, 2, 3 and 4 is detected on a vehicle which has not been in an accident, only the damaged seatbelt needs to be replaced.
- Belt webbing cut, torn or chafed.
- Webbing loops on belt edge torn.
- Burn marks from cigarettes or similar.
- One side of belt edge deformed or area of belt edge is wavy.

Copyright by Volkswagen AG. Volkswagen AG does not guarantee or accept any liability with respect to the correctness of information. Copying for private or commercial purposes, in part or in whole, is not permitted unless authorised by Volkswagen AG.

3.1.3 Retractor, Checking Locking Function

The belt retractor has two locking functions.

♦ The first locking function is initiated by belt being jerked out of the retractor (belt extraction acceleration).

Checking

– Pull belt webbing out of retractor with a firm jerk.

• No locking effect - replace seat belt complete with belt buckle.

• If difficulties are experienced when pulling out or retracting belt, first check whether position of retractor has been altered.

• The second locking function is initiated by change in vehicle velocity (vehicle-dependent locking function).

Checking

– Fasten seat belt.

– Accelerate vehicle to 12 mph (20 km/h) and then perform a full braking maneuver with foot brake.

• Replace seat belt complete with seat belt latch if seat belt is not locked by locking mechanism during braking procedure.

> ⚠ WARNING
>
> *For safety reasons, road testing should be carried out on traffic-free stretch to ensure that other motorists/pedestrians etc. are not endangered.*

3.1.4 Belt Latch, Inspection

– Inspect belt buckle for cracks and fracturing.

• If damaged, replace seat belt complete with belt buckle.

3.1.5 Belt Latch, Checking

Checking seat belt latch:

– Insert belt tongue into belt buckle until it clicks into place. Check whether locking mechanism is properly engaged by giving belt webbing a firm jerk.

• Replace seat belt complete with seat belt latch if belt tongue fails even only once to engage properly in seat belt latch during at least 5 tests.

Check release mechanism:

– Press the seat belt latch to release the seat belt.

• With the seat belt relaxed, the lock tongue must spring out of seat belt latch without assistance.

• Perform test at least 5 times. Replace the seat belt completely together with the seat belt latch if the lock tongue fails to spring out even once.

> ⚠ WARNING
>
> *Under no circumstances may grease be used to eliminate noise or stiffness at belt buckle buttons.*

3.1.6 Belt Guide Rings and Locking Tongue, Checking

The plastic-covered guides show fine parallel scoring after straining belt system (belt was fastened during accident). (Wear which has been brought about by frequent belt use can be identified by smooth signs of wear which are free of scoring.)

Protected copyright. Copyright by Volkswagen AG. Volkswagen AG does not guarantee or accept any liability with respect to the correctness of information in this document. Copyright by Volkswagen AG. Copying for private or commercial purposes, in part or in whole, is not permitted unless authorised by Volkswagen AG.

– Check plastic for deformation, rupture and tearing.

• For groove build-up and/or damage, replace seat belt completely with lock.

3.1.7 Securing Components and Anchorage Points, Checking

♦ Latch bracket deformed (stretched)

♦ Height adjuster not functional

♦ Anchorage points (seat, pillar, vehicle floor) distorted or thread damaged

• If damage is found at components, replace the seat belt completely with lock.

• Replace anchorage points.

Note

In damage is discovered that is not accident-related, e.g. wear, replace the particular part which is damaged.

3.2 Airbag Component Adapting

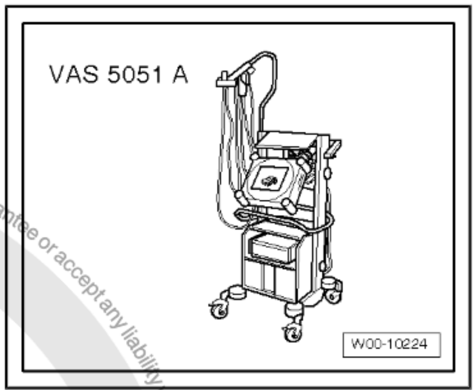

♦ Diagnostic Cable - VAS5051/1- or Diagnostic Cable - VAS5051/3-

Select “Guided Fault Finding” on Vehicle Diagnostic Tester.

After all control modules have been interrogated:

– Press “Go to” button

– Select “Function/Component selection”

– Select “Body”

– “Body Repairs”

– Select “01 - On Board Diagnostic (OBD) capable systems”

– Select “Airbag”

– Select “Functions”

– Select “Action”

3.3 LATCH Child Seat Anchors, Inspecting after an Accident

Inspection Points

♦ After an accident, child seat anchors must be inspected for damage and deformation.

♦ Child seat anchors that are welded into the body cannot be repaired or corrected.

♦ Child seat anchors that are bolted to the body must be replaced if damaged or deformed.

Protected by copyright. Copying for private or commercial purposes, in part or in whole, is not permitted unless authorised by Volkswagen AG. Volkswagen AG does not guarantee or accept any liability with respect to the correctness of information in this document. Copyright by Volkswagen AG.

4 Removal and Installation

⇒ “4.1 Seat Belts”, page 56

⇒ “4.2 Driver and Passenger Side Airbag”, page 63

⇒ “4.3 Driver Side and Passenger Side Curtain Airbag, Recaro Seat”, page 65

⇒ “4.4 Driver and Passenger Side Airbag Crash Sensor”, page 67

⇒ “4.5 Passenger Side Airbag Unit”, page 68

⇒ “4.6 Airbag Control Module”, page 69

⇒ “4.7 Driver Airbag”, page 70

⇒ “4.8 Steering Wheel”, page 79

⇒ “4.9 Airbag Spiral Spring/Return Spring with Slip Ring”, page 83

⇒ “4.10 Driver/Passenger Side Curtain Airbag, Sedan”, page 83

⇒ “4.11 Driver/Passenger Side Curtain Airbag, Wagon”, page 85

⇒ “4.12 Deformation Elements”, page 87

4.1 Seat Belts

⇒ “4.1.1 Belt Buckle”, page 56

⇒ “4.1.2 Rear Seatbelt with Belt Tensioner, Wagon”, page 57

⇒ “4.1.3 Rear Seatbelt with Belt Tensioner, Sedan”, page 59

⇒ “4.1.4 Automatic Belt Retractor”, page 61

⇒ “4.1.5 Child Seat Anchor Bracket, Sedan”, page 61

⇒ “4.1.6 Child Seat Anchor Bracket, Wagon”, page 63

4.1.1 Belt Buckle

Removing

– Remove seat

♦ Front seat. Refer to ⇒ “2.1.1 Front Seat”, page 161

♦ “Recaro seat”. Refer to ⇒ “2.2 Recaro Seats, Front”, page 177

– For vehicles with electric request to buckle up, disconnect wiring harness from seat frame.

Protected by copyright. Copying for private or commercial purposes, in part or in whole, is not permitted unless authorised by Volkswagen AG. Volkswagen AG does not guarantee or accept any liability with respect to the correctness of information in this document. Copyright by Volkswagen AG.

– Remove bolt -1- (24 Nm).

– Remove spring washer -2-, belt buckle -3- and thrust piece -4- from seat frame.

Installing

To install, perform the steps used for removal in reverse order.

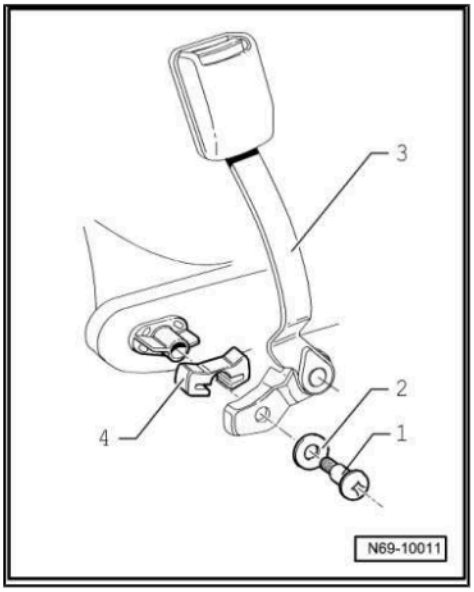

4.1.2 Rear Seatbelt with Belt Tensioner, Wagon

Note

The illustrations cover only the right side of the vehicle, the left side of the vehicle is similar.

– Switch off ignition.

– Fold seat cushions of rear seats forward.

– Remove luggage compartment cover.

– Remove right rear backrest (two parts). Refer to ⇒ "2.3.4 Two-Part Rear Seat Backrest", page 204

– Remove storage area floor covering. Refer to ⇒ "2.4.11 Luggage Compartment Floor Cover, Wagon", page 151 .

– Remove rear lock carrier cover (Wagon).

– Remove storage area trim (Wagon). Refer to ⇒ "2.4.6 Rear luggage Compartment Trim, Wagon", page 142

Protected by copyright. Copying for private or commercial purposes, in part or in whole, is not permitted unless authorised by Volkswagen AG. Volkswagen AG does not guarantee or accept any liability with respect to the correctness of information in this document. Copyright by Volkswagen AG.

Protected by copyright. Copyright by Volkswagen AG. Volkswagen AG does not guarantee or accept any liability with respect to the correctness of information in this document. Copyright by Volkswagen AG. Reproduction, copying for private or commercial purposes, in part or in whole, is not permitted unless authorised by Volkswagen AG.

– Remove the bolt -1- (40 Nm) and remove belt anchor -2- from body.

Note

When installing, markings -3- and -4- must align to guarantee correct installation position of components.

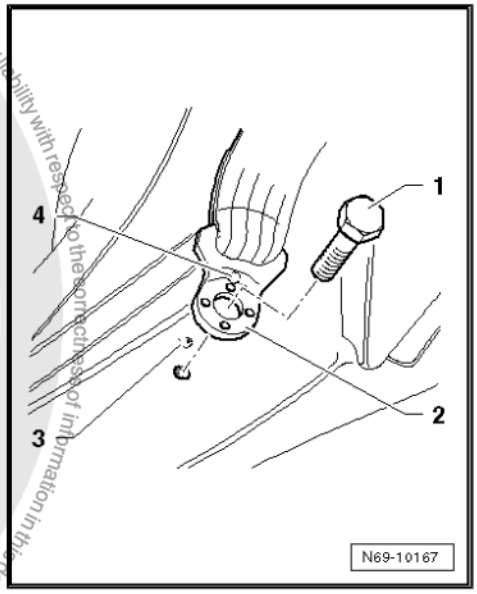

– Loosen cover -1- from belt guide arm -2-.
– Loosen belt guide arm -2- from belt guide.

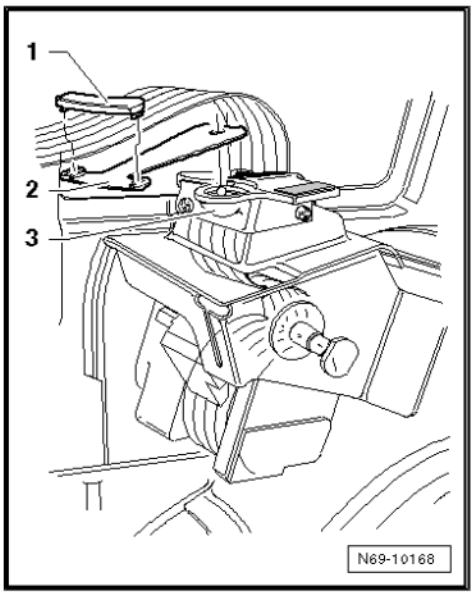

– Remove bolts -1- and -2- (5 Nm) and remove belt guide -3-.

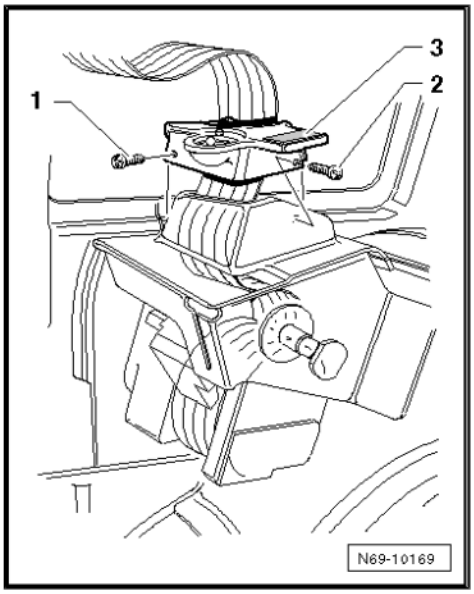

– Remove bolt -1- (5 Nm).
– Remove bolt -1- (40 Nm) and thread automatic belt retractor -2- out of mount in body.
– Thread belt latching tongue -4- and belt anchor -5- through opening in body.

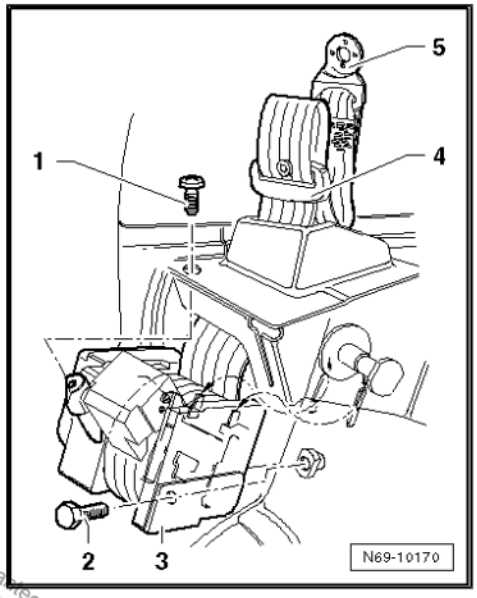

4.1.3 Rear Seatbelt with Belt Tensioner, Sedan

Note

The illustrations cover only the right side of the vehicle, the left side of the vehicle is similar.

– Remove seat bench. Refer to ⇒ "2.3.1 Sedan Bench Seat", page 198 .
– Remove rear backrest (one piece). Refer to ⇒ "2.3.3 One-part Rear Seat Backrest", page 201 .
– Remove upper C/D-pillar trim (Sedan). Refer to ⇒ "2.3.5 Upper C/D-Pillar Trim, Sedan", page 120 .
– Loosen cover -1- from belt guide arm -2-.
– Loosen belt guide arm -2- from belt guide.

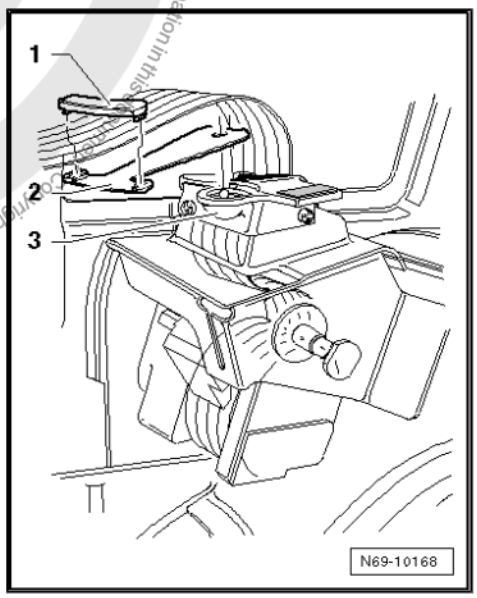

Protected by copyright. Copying for private or commercial purposes, in part or in whole, is not permitted unless authorised by Volkswagen AG. Volkswagen AG does not guarantee or accept any liability with respect to the correctness of information in this document. Copyright by Volkswagen AG.

– Loosen hex nut -2- and remove lock bolt -3-.

– Pull cushion -1- in upper area out of clip -4-, press lower tab -6- to rear from sill panel -7- and remove upward with tab -5-.

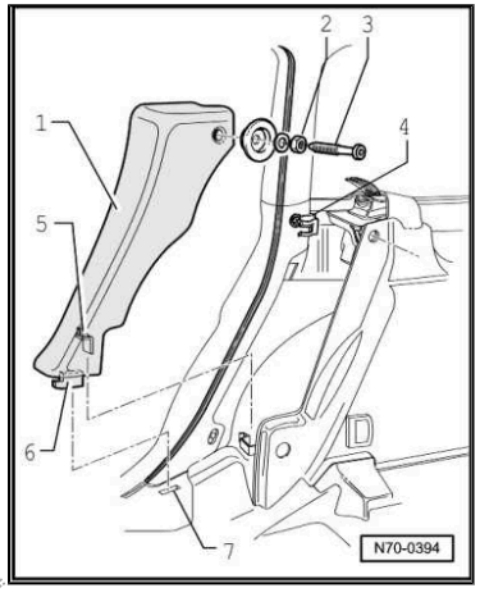

– Remove the bolt -1- (40 Nm) and remove belt anchor -2- from body.

Note

When installing, markings -3- and -4- must align to guarantee correct installation position of components.

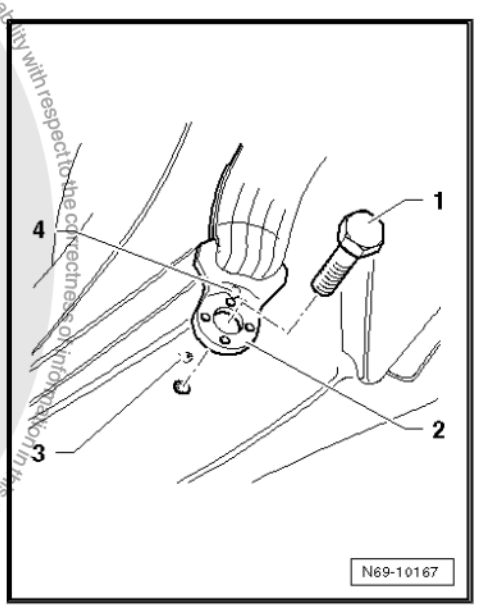

– Remove bolts -1- and -2- (5 Nm) and remove belt guide -3-.

– Remove the bolt -1- (40 Nm) and remove automatic belt retractor -2- from mount in body.

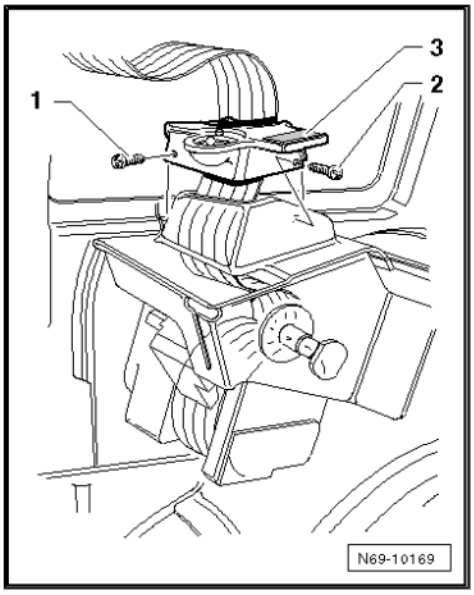

Copyright by Volkswagen AG. Volkswagen AG does not guarantee or accept any liability with respect to the correctness of information in this document. Copying for private or commercial purposes, in part or in whole, is not permitted unless authorised by Volkswagen AG.

– Thread belt latching tongue -3- and belt anchor -4- through opening in body.

Installing

To install, perform the steps used for removal in reverse order.

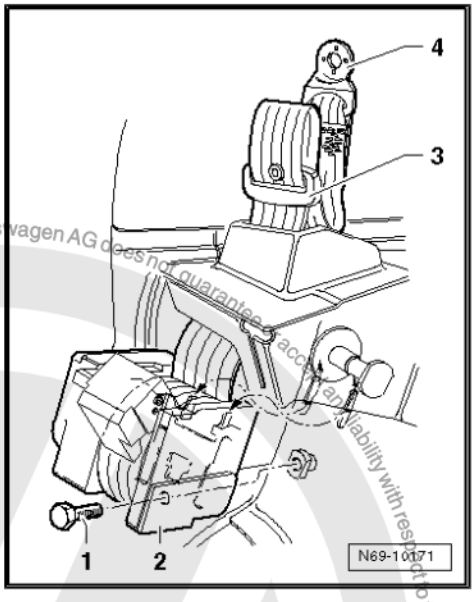

4.1.4 Automatic Belt Retractor

– Remove bench seat backrest. Refer to ⇒ “2.3.1 Sedan Bench Seat”, page 198 .

– Pry off cover cap -1- from seatbelt guide -2-.

– Remove the belt end fitting -3- from floor assembly (40 Nm).

– Unclip seatbelt guide -2- and remove from belt -4-.

– Remove cover and cushion for seat bench backrest. Refer to ⇒ “1.3.1 Bench Seat Cover”, page 241 .

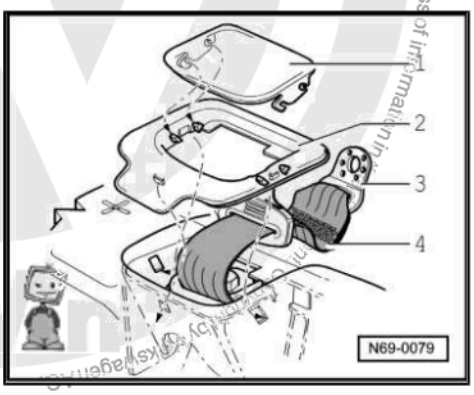

– Remove hex bolt -1- (40 Nm) and belt guide -2- from support -3-.

– Remove hex nut -5- (40 Nm) or hex bolt (solid backrest) and unhook belt retractor -4- from support -3-.

– Remove seatbelt with belt guide from support -3- downward.

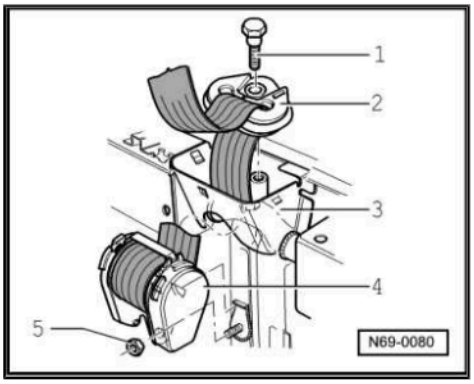

Note

To unreel seatbelt, automatic belt retractor must be held in installation position.

4.1.5 Child Seat Anchor Bracket, Sedan

Protected by copyright. Copying for private or commercial purposes, in part or in whole, is not permitted unless authorised by Volkswagen AG. Volkswagen AG does not guarantee or accept any liability with respect to the correctness of information.

1 - Anchor Bracket

♦ Installing

– Remove the hat shelf -8-. Refer to ⇒ “2.3.9 Rear Shelf”, page 129

– Drill holes at the marked locations.

– Secure the threaded plate -7- with rivets -6-.

– Install the hat shelf. Refer to ⇒ “2.3.9 Rear Shelf”, page 129

– Install the anchor bracket -1- or plugs -5-.

2 - Cap

3 - Bolt

♦ 40 Nm

4 - Spacer

5 - Plugs

6 - Rivets

7 - Threaded Plate

8 - Rear Shelf

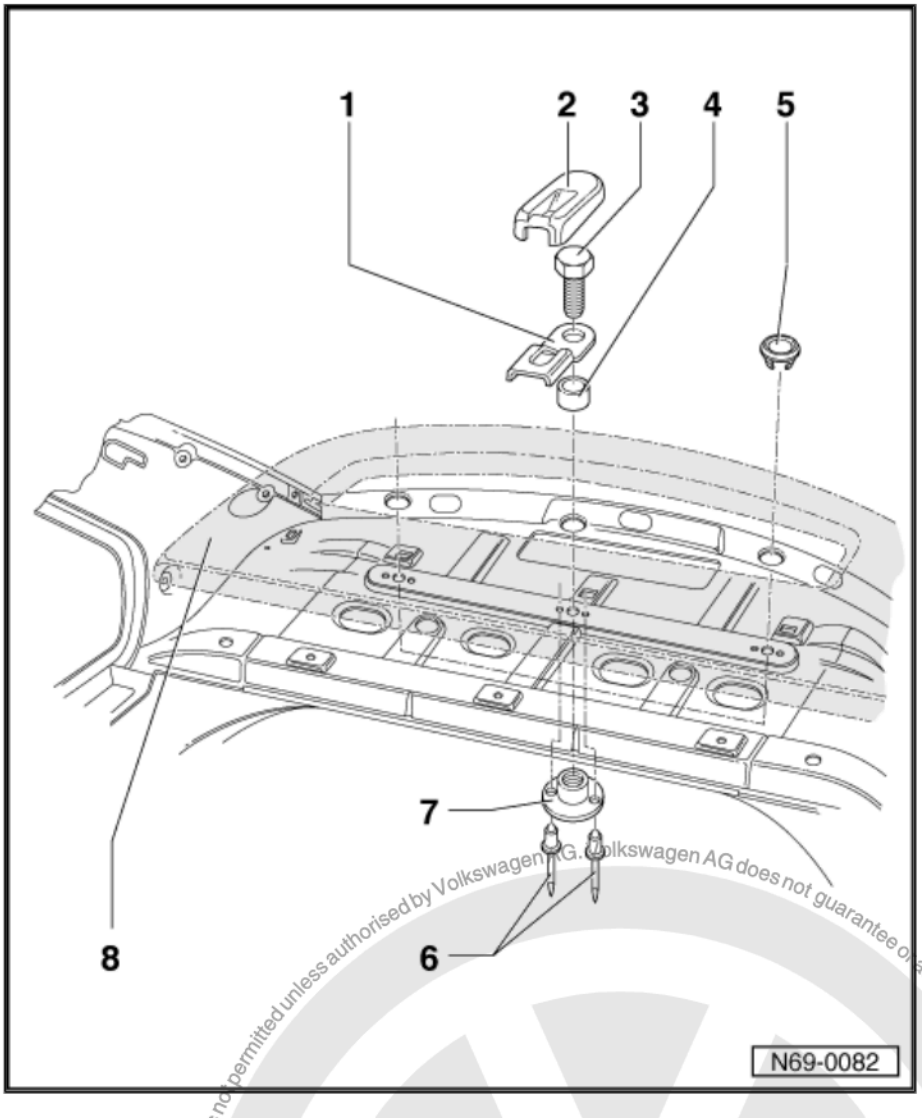

Protected by copyright. Copying for private or commercial purposes, in part or in whole, is not permitted unless authorised by Volkswagen AG. Volkswagen AG does not guarantee or accept any liability with respect to the correctness of information in this document. Copyright by Volkswagen AG.

4.1.6 Child Seat Anchor Bracket, Wagon

1 - Anchor Bracket

Installing

- Cut into the rear seat backrest cushion according to the specified dimensions in the area of the threaded plates -5-.
- Install the anchor bracket.

2 - Cap

3 - Bolt

♦ 40 Nm

4 - Rear Seat Backrest (Divided)

Note

♦ *Make sure the threaded plates are there.*

♦ *Cut into the rear seat backrest cushion according to the specified dimensions.*

5 - Threaded Plate

♦ Quantity: 3

♦ Component of the rear seat backrest

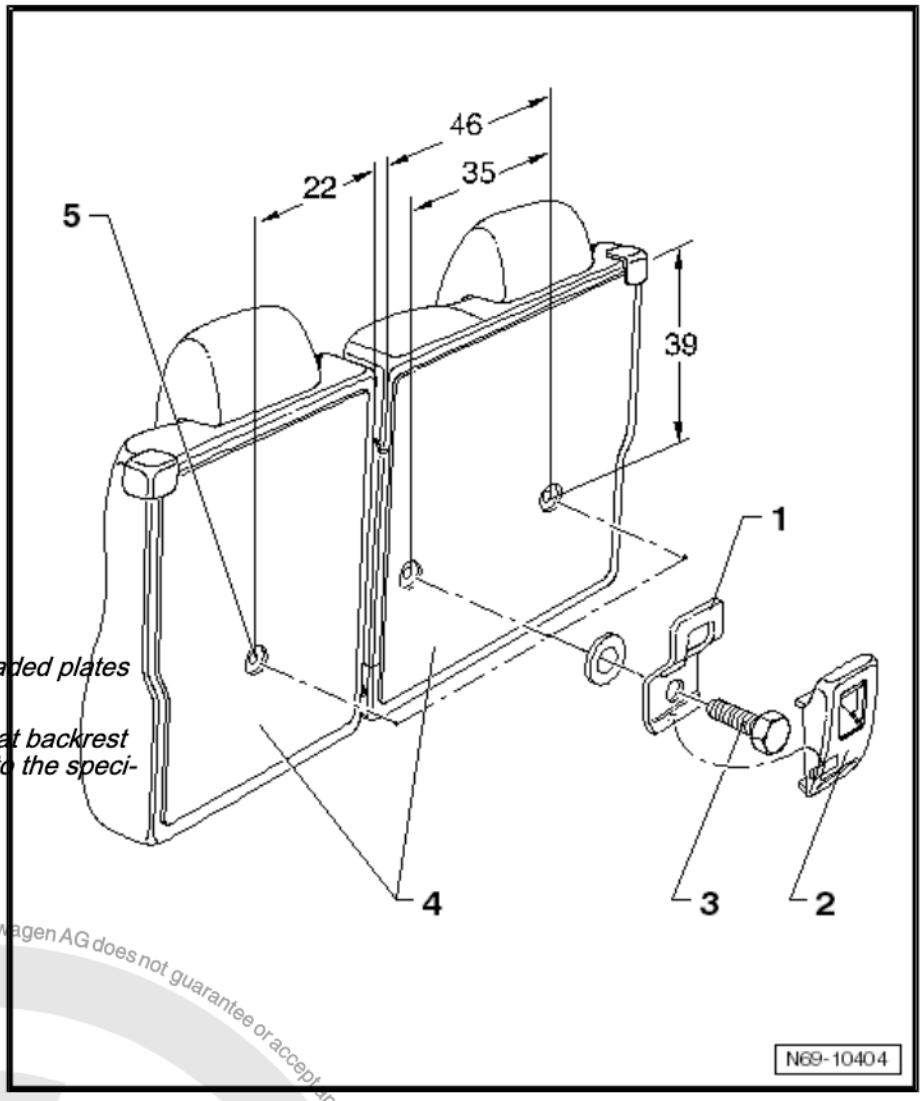

4.2 Driver and Passenger Side Airbag

Removing

WARNING

Observe safety precautions for working on airbags. Refer to ⇒ *"1.1 Airbag Safety Precautions", page 27*

- Disconnect vehicle battery. Refer to ⇒ Electrical Equipment; Rep. Gr. 27 ; Removal and Installation
- Remove backrest frame. Refer to ⇒ "2.1.2 Front Backrest", page 164 and loosen backrest cover in area of airbag --item 1- ⇒ Item 1 (page 39) -.

Protected by copyright. Copyright for private or commercial purposes, in part or in whole, is not permitted unless authorised by Volkswagen AG. Volkswagen AG does not guarantee or accept any liability with respect to the correctness of information in this document. Copyright by Volkswagen AG

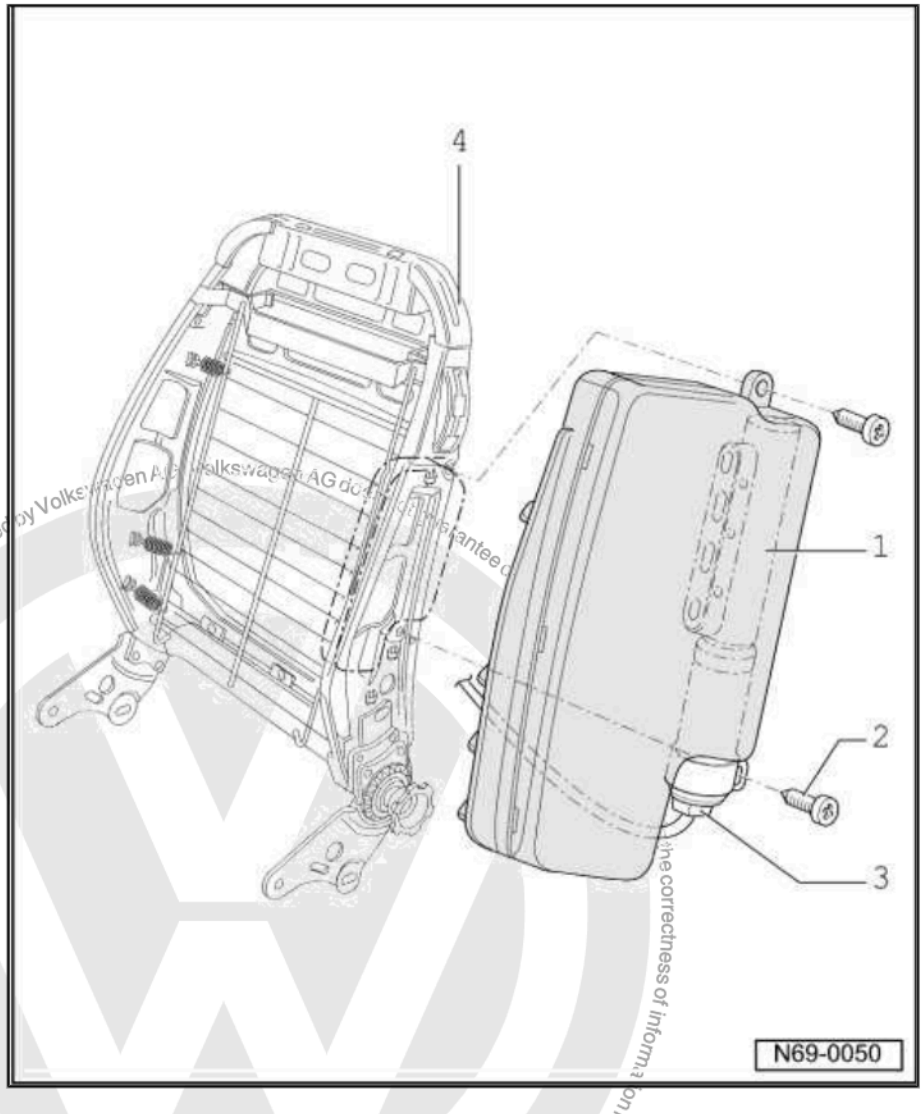

– Remove bolts --item 2- ⇒ Item 2 (page 39) -.

> ⚠ WARNING
>
> *Electrostatic discharges can lead to an unintended deployment of the airbag. Therefore the technician must discharge static electricity from the body before separating the ignition and ground wiring. This is done e.g. by briefly touching the body or the door striker or pin.*

– Disconnect connector --item 3- ⇒ Item 3 (page 39) - from airbag unit --item 1- ⇒ Item 1 (page 39) -.

– Pull off airbag unit --item 1- ⇒ Item 1 (page 39) - from backrest frame --item 4- ⇒ Item 4 (page 39) -.

Installing

– To install, perform the steps used for removal in reverse order.

– Switch on ignition.

Copyright by Volkswagen AG. Copying for private or commercial purposes, in part or in whole, is not permitted unless authorised by Volkswagen AG. Volkswagen AG does not guarantee the correctness of information in this document.

Protected by copyright. Copyright by Volkswagen AG. Volkswagen AG does not guarantee or accept any liability with respect to the correctness of information in this document. Vehicle, authorised by Volkswagen AG, is not permitted for commercial purposes, in part or in whole.

WARNING

Make sure that no one is in the vehicle.

– Connect vehicle battery. Refer to⇒ Electrical Equipment; Rep. Gr. 27 ; Removal and Installation .

4.3 Driver Side and Passenger Side Curtain Airbag, Recaro Seat

Note

Removal and installation is described for the right-hand side of the vehicle. Removal and installation for the left-hand side is performed in the same manner.

Removing

WARNING

Observe safety precautions for working on airbags. Refer to ⇒ "1.1 Airbag Safety Precautions", page 27

– Remove Recaro seat. Refer to ⇒ "2.2.1 Recaro Seats", page 177

– Remove trim, backrest mounting bracket. Refer to ⇒ "2.2.2 Backrest Hinge Trim", page 179

– Remove seat side trim on door sill side. Refer to ⇒ "2.2.6 Seat Side Trim", page 186

Protected by copyright. Copying for private or commercial purposes, in part or in whole, is not permitted unless authorised by Volkswagen AG. Volkswagen AG does not guarantee or accept any liability with respect to the correctness of information in this document. Copyright by Volkswagen AG.

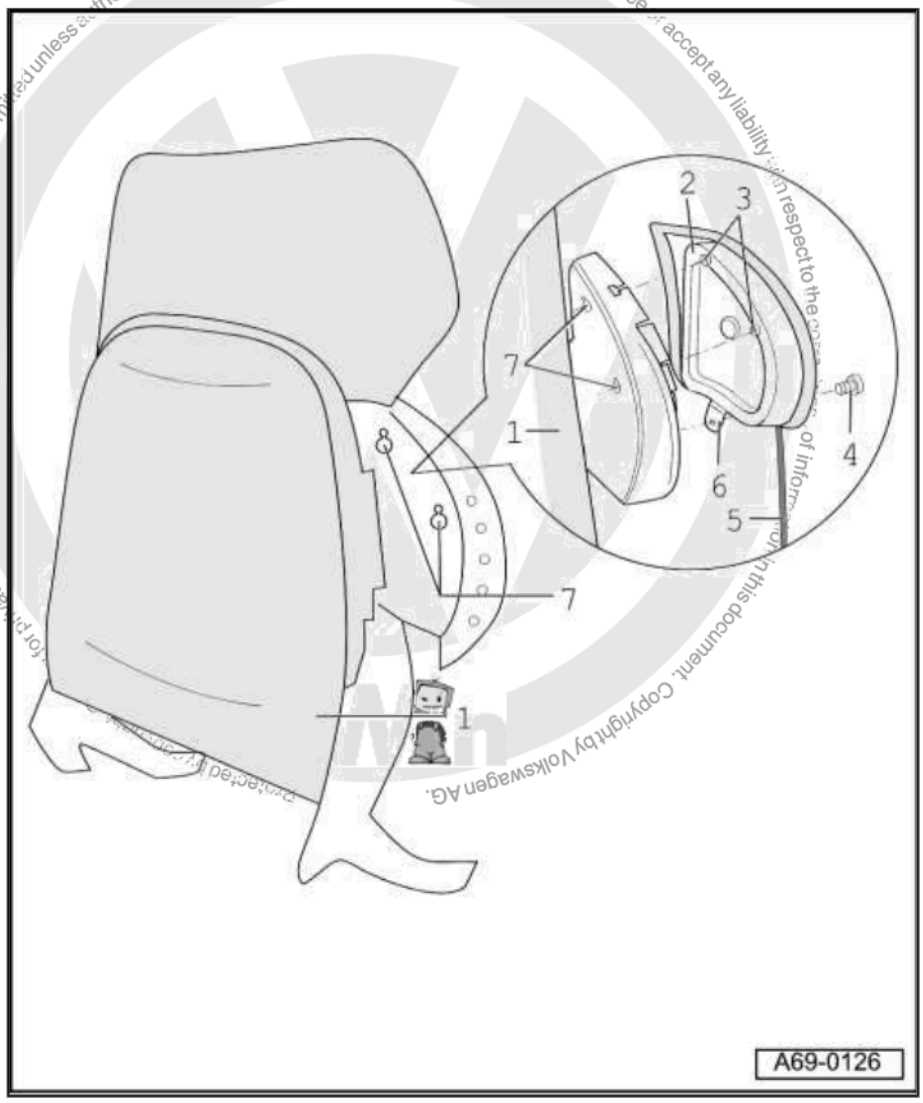

– Disconnect wiring harness -5- from seat frame.
– Remove bolt -4- from tab -6- and backrest -1- (10 Nm).
– Press side airbag -2- downward until it stops.
– Pull side airbag toward outside, side airbag engaging pins -3- are pulled out of holes -7-.

Installing

– To install, perform the steps used for removal in reverse order.
– Switch on ignition.

> ⚠ WARNING
>
> *Make sure that no one is in the vehicle.*

– Connect vehicle battery. Refer to⇒ Electrical Equipment; Rep. Gr. 27 ; Removal and Installation .

4.4 Driver and Passenger Side Airbag Crash Sensor

Removing

> ⚠ WARNING
>
> *Observe safety precautions for working on airbags. Refer to ⇒ "1.1 Airbag Safety Precautions", page 27*

– Disconnect vehicle battery. Refer to⇒ Electrical Equipment; Rep. Gr. 27 ; Removal and Installation

– Remove driver/passenger seat (use Airbag Lockout Adapter - VAS5061-). Refer to ⇒ "2.1.1 Front Seat", page 161 .

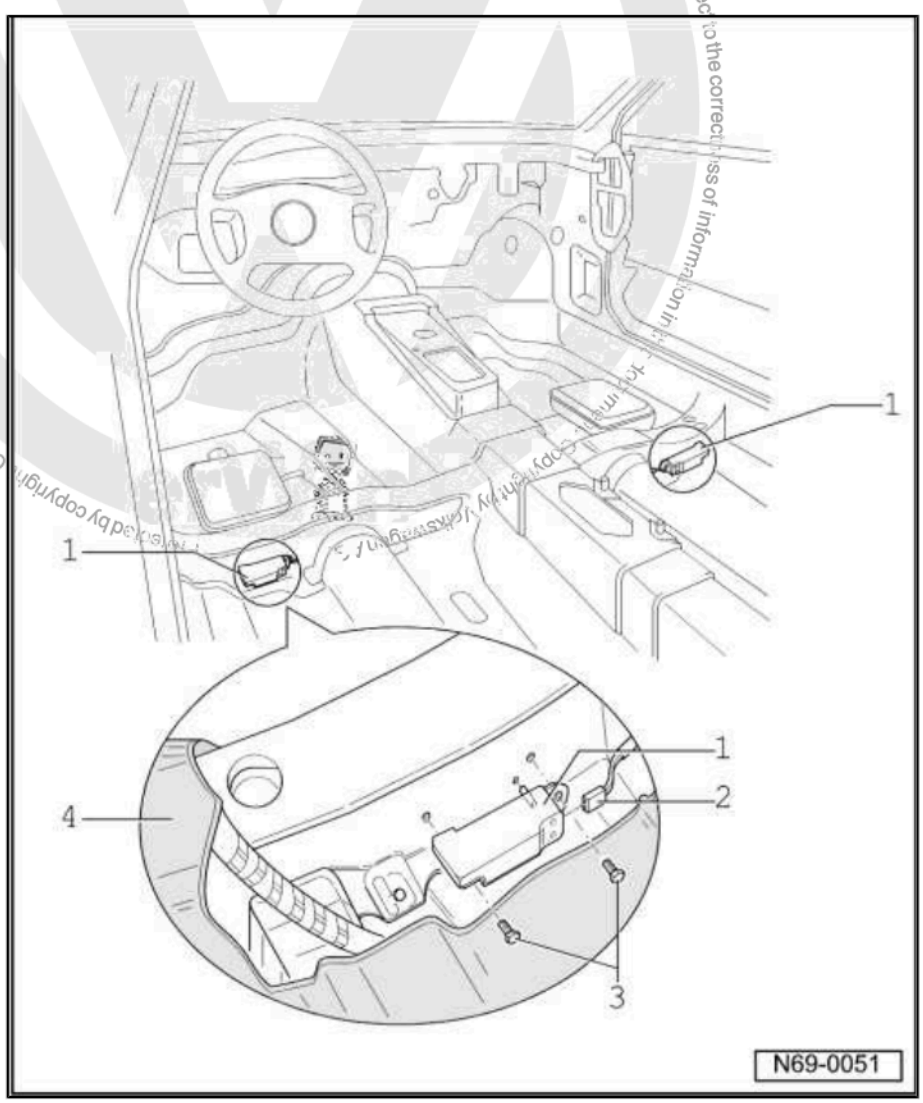

– Remove carpet --item 4- ⇒ Item 4 (page 40) - and insulation mat in sensor area.

– Disconnect harness connector --item 2- ⇒ Item 2 (page 40) - and remove bolts --item 3- ⇒ Item 3 (page 40) -.

Copyrighted by Volkswagen AG. Volkswagen AG does not guarantee or accept any liability with respect to the correctness of information in this copy. Copying for private or commercial purposes, in part or in whole, is not permitted unless authorised by Volkswagen AG.

Installing

– To install, perform the steps used for removal in reverse order.

– Switch on ignition.

> ⚠ WARNING
>
> *Make sure that no one is in the vehicle.*

– Connect vehicle battery. Refer to ⇒ Electrical Equipment; Rep. Gr. 27 ; Removal and Installation .

4.5 Passenger Side Airbag Unit

> ⚠ WARNING
>
> *Observe safety precautions for working on airbags. Refer to ⇒ "1.1 Airbag Safety Precautions", page 27*

Protected by copyright. Copying for private or commercial purposes, in part or in whole, is not permitted unless authorised by Volkswagen AG. Volkswagen AG does not guarantee or accept any liability with respect to the correctness of information. Copyright by Volkswagen AG.

– Disconnect vehicle battery. Refer to ⇒ Electrical Equipment; Rep. Gr. 27 ; Removal and Installation

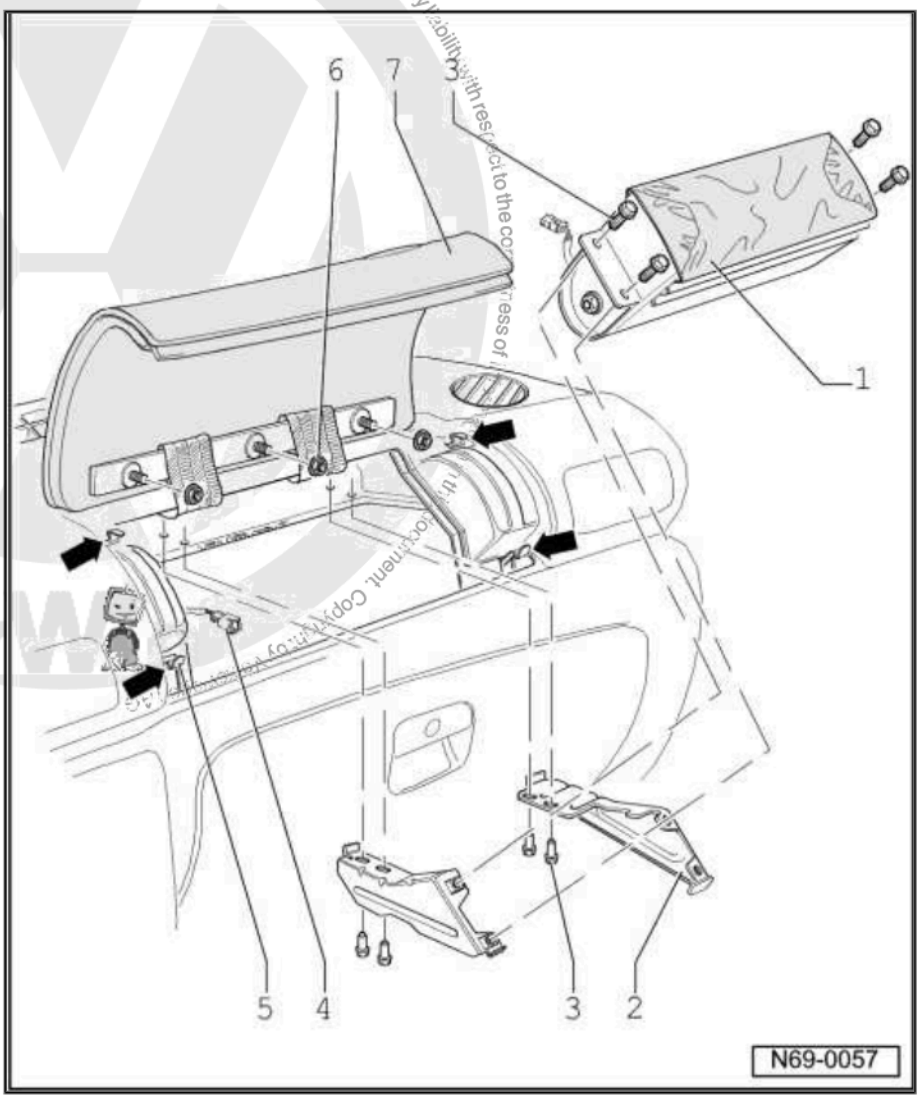

– Remove cover --item 7- ⇒ Item 7 (page 38) - for passenger side airbag against direction of travel (cover is held by four clips -arrows-).

– Swing upward and remove hex nuts --item 6- ⇒ Item 6 (page 38) -.

> ⚠ WARNING
>
> *Electrostatic discharges can lead to an unintended deployment of the airbag. Therefore the technician must discharge static electricity from the body before separating the ignition and ground wiring. This is done e.g. by briefly touching the body or the door striker or pin.*

– Remove hex bolts --item 3- ⇒ Item 3 (page 38) - , remove air-bag units from support --item 2- ⇒ Item 2 (page 38) - and disconnect harness connector --item 4- ⇒ Item 4 (page 38) - .

Installing

To install, perform the steps used for removal in reverse order.

– Switch on ignition.

> ⚠ WARNING
>
> *Make sure that no one is in the vehicle.*

– Connect vehicle battery. Refer to ⇒ Electrical Equipment; Rep. Gr. 27 ; Removal and Installation

4.6 Airbag Control Module

> ⚠ WARNING
>
> *Observe safety precautions for working on airbags. Refer to.*
> *⇒ "1.1 Airbag Safety Precautions", page 27*

Removing

– Remove center console and cover for center instrument pane. Refer to
⇒ "2.2 Storage Compartments, Covers and Trim", page 11

– Disconnect vehicle battery. Refer to ⇒ Electrical Equipment; Rep. Gr. 27 ; Removal and Installation

Protected by copyright. Copying for private or commercial purposes, in part or in whole, is not permitted unless authorised by Volkswagen AG. Volkswagen AG does not guarantee or accept any liability with respect to the correctness of information in this document. Copyright by Volkswagen AG.

– Swing bracket -2- in opposite direction of -arrow- and pull out harness connector -3- from control module -1-.

– Remove nuts -4- and pull control module from studs (nut -4- = 6 Nm).

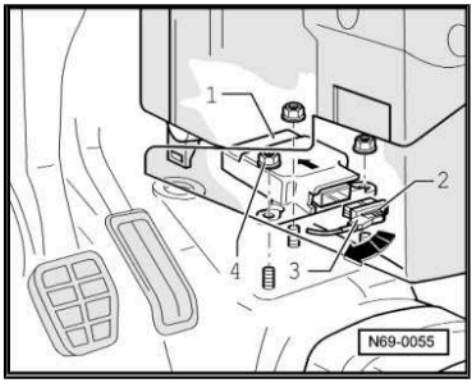

Installing

– To install, perform the steps used for removal in reverse order.

– Switch on ignition.

> ⚠ WARNING
>
> *Make sure that no one is in the vehicle.*

– Connect vehicle battery. Refer to ⇒ Electrical Equipment; Rep. Gr. 27 ; Removal and Installation .

– When the control module is replaced, it must be coded; adapting components (coding). Refer to
⇒ "3.2 Airbag Component Adapting", page 55 .

4.7 Driver Airbag

⇒ "4.7.1 Four-Spoke Steering Wheel", page 70

⇒ "4.7.2 Three-Spoke Steering Wheel", page 73

W8 ⇒ "4.7.3 Three-Spoke Steering Wheel", page 76

4.7.1 Four-Spoke Steering Wheel

> ⚠ WARNING
>
> *Observe safety precautions for working on airbags. Refer to ⇒ "1.1 Airbag Safety Precautions", page 27*

– Disconnect vehicle battery. Refer to ⇒ Electrical Equipment; Rep. Gr. 27 ; Removal and Installation

Protected by copyright. Copying for private or commercial purposes, in part or in whole, is not permitted unless authorised by Volkswagen AG. Volkswagen AG does not guarantee or accept any liability with respect to the correctness of information in this document. Copyright by Volkswagen AG.

Published by Volkswagen AG. Volkswagen AG does not guarantee or accept any liability with respect to the correctness of information in this publication. Copyright. Copying for private or commercial purposes, in part or in whole, is not permitted unless authorised by Volkswagen AG.

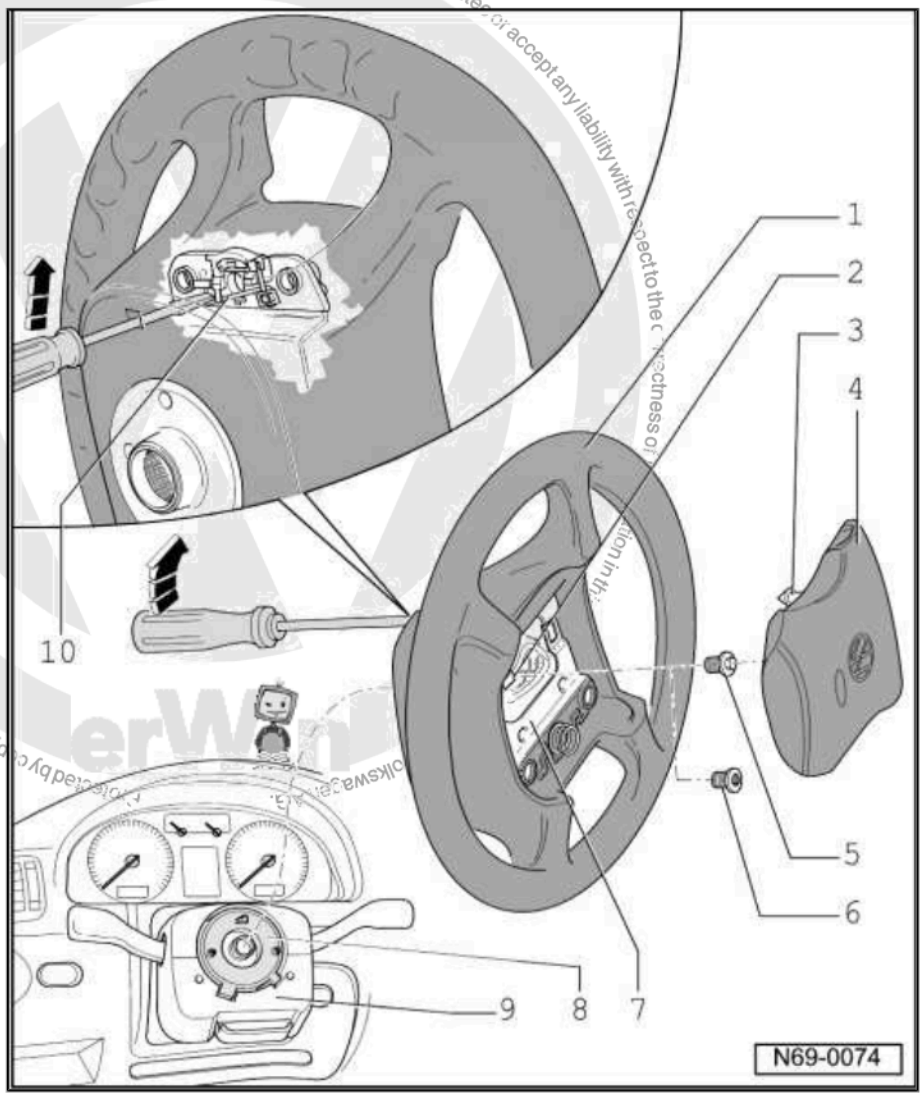

- Release steering column adjuster.
- Rotate --item 1- ⇒ Item 1 (page 50) - steering wheel until steering wheel spoke is vertical. Pull out steering column entirely and push into lower position.
- Secure steering column adjustment.
- Place a screwdriver approximately 175 mm long from behind in steering wheel bezel hole (insert screwdriver approximately 45 mm).

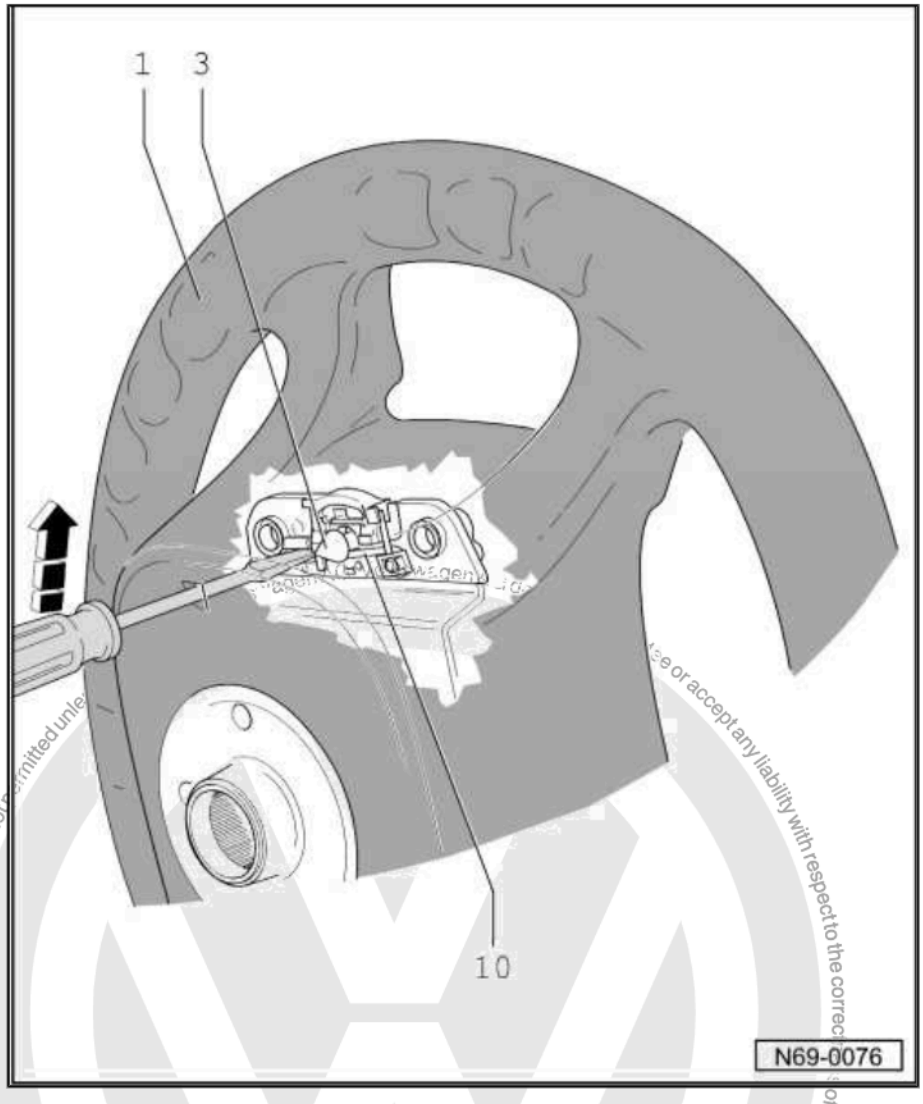

– Press screwdriver in direction of -arrow-. This presses the clip --item 10- ⇒ Item 10 (page 50) - back and the --item 3- ⇒ Item 3 (page 50) - airbag unit retaining hook is released.

– Turn steering wheel back 180° and disengage second catch on the opposite side.

– Place steering wheel. -item 1- ⇒ Item 1 (page 50) in center position (wheels in straight-ahead position).

> ⚠ WARNING
>
> *Electrostatic discharges can lead to an unintended deployment of the airbag. Therefore the technician must discharge static electricity from the body before separating the ignition and ground wiring. This is done e.g. by briefly touching the body or the door striker or pin.*

– Remove connector from airbag unit.

Installing

– Connect wiring harness of driver side airbag.

– Push airbag unit into steering wheel.

Protected by copyright. Copyright by Volkswagen AG.

– Check whether airbag unit is engaged in steering wheel completely.
– Switch on ignition.

> ⚠ WARNING
>
> *Make sure that no one is in the vehicle.*

– Connect vehicle battery. Refer to ⇒ Electrical Equipment; Rep. Gr. 27 ; Removal and Installation

4.7.2 Three-Spoke Steering Wheel

Protected by copyright. Copying for private or commercial purposes, in part or in whole, is not permitted unless authorised by Volkswagen AG. Volkswagen AG does not guarantee or accept any liability with respect to the correctness of information in this document. Copyright by Volkswagen AG.

Note

For W8, refer to
⇒ "4.7.3 Three-Spoke Steering Wheel", page 76 .

> ⚠ WARNING
>
> *Observe safety precautions for working on airbags. Refer to*
> *⇒ "1.1 Airbag Safety Precautions", page 27*

– Disconnect vehicle battery. Refer to ⇒ Electrical Equipment; Rep. Gr. 27 ; Removal and Installation

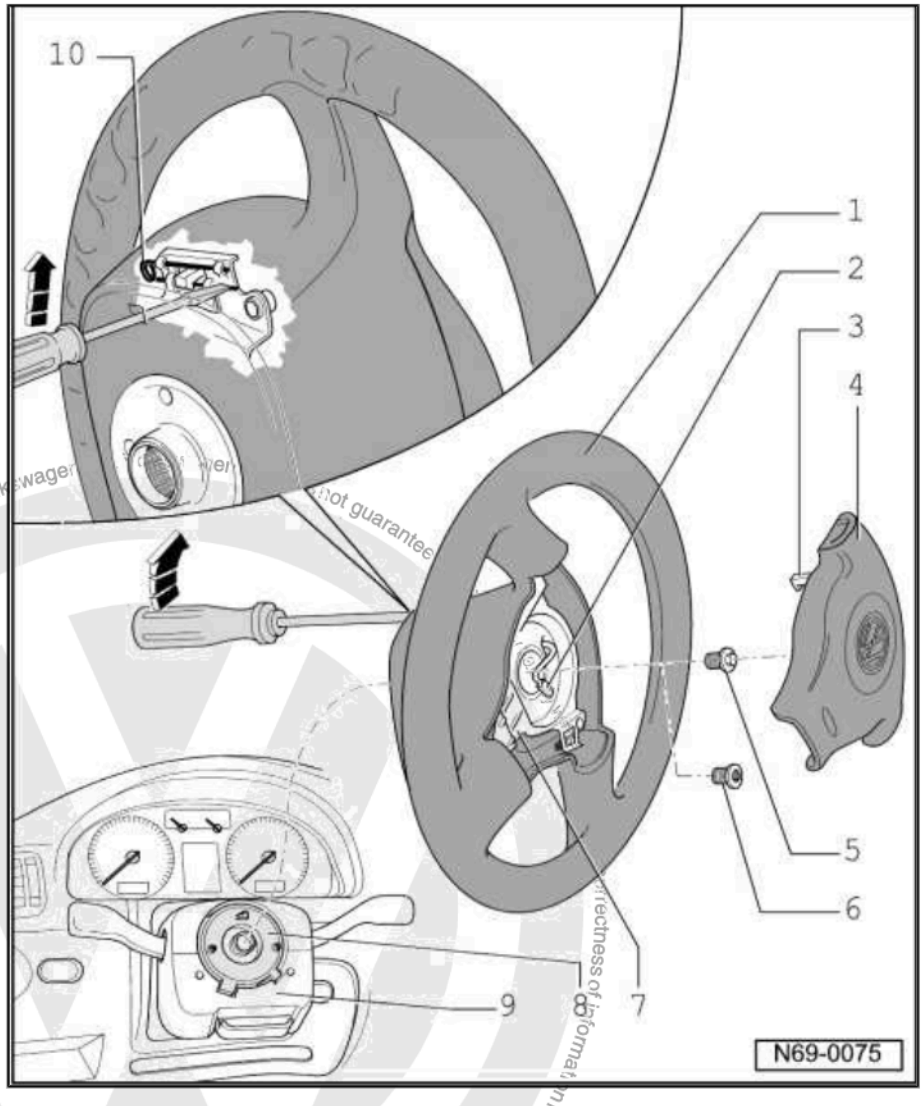

– Release steering column adjuster.
– Rotate --item 1- ⇒ Item 1 (page 50) - steering wheel until steering wheel spoke is vertical. Pull out steering column entirely and push into upper position.
– Secure steering column adjustment.
– Place a screwdriver approximately 175 mm long from behind in steering wheel bezel hole (insert screwdriver approximately 45 mm).

Copyright by Volkswagen AG. Protected by copyright. Use or publication for commercial purposes, in part or in whole, is not permitted unless authorised by Volkswagen AG. We do not guarantee the correctness of information in this document.

Copyright. Copying for private or commercial purposes, in part or in whole, is not permitted unless authorised by Volkswagen AG. Volkswagen AG does not guarantee or accept any liability with respect to the correctness of information

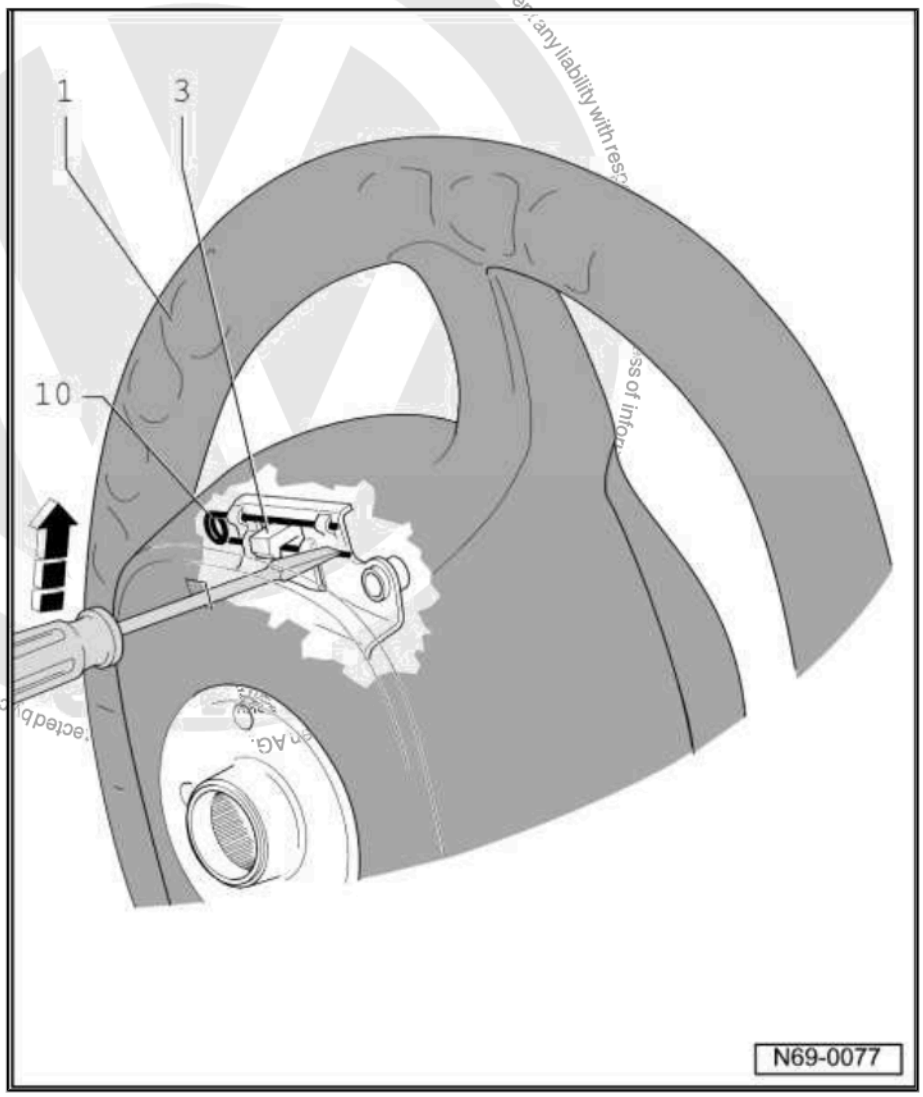

– Press screwdriver in direction of -arrow-. This presses the clip --item 10- ⇒ Item 10 (page 51) - back and the --item 3- ⇒ Item 3 (page 50) - airbag unit retaining hook is released.

– Turn steering wheel back 180° and disengage second catch on the opposite side.

– Place steering wheel -item 1- ⇒ Item 1 (page 50) in center position (wheels in straight-ahead position).

> ⚠ WARNING
>
> *Electrostatic discharges can lead to an unintended deployment of the airbag. Therefore the technician must discharge static electricity from the body before separating the ignition and ground wiring. This is done e.g. by briefly touching the body or the door striker or pin.*

– Remove connector from airbag unit.

Installing

– Connect wiring harness of driver side airbag.

– Push airbag unit into steering wheel.

– Check whether airbag unit is engaged in steering wheel completely.
– Switch on ignition.

> ⚠ WARNING
>
> *Make sure that no one is in the vehicle.*

– Connect vehicle battery. Refer to ⇒ Electrical Equipment; Rep. Gr. 27 ; Removal and Installation

4.7.3 Three-Spoke Steering Wheel

> ⚠ WARNING
>
> *Observe safety precautions for working on airbags. Refer to* *⇒ "1.1 Airbag Safety Precautions", page 27*

– Disconnect vehicle battery. Refer to ⇒ Electrical Equipment; Rep. Gr. 27 ; Removal and Installation

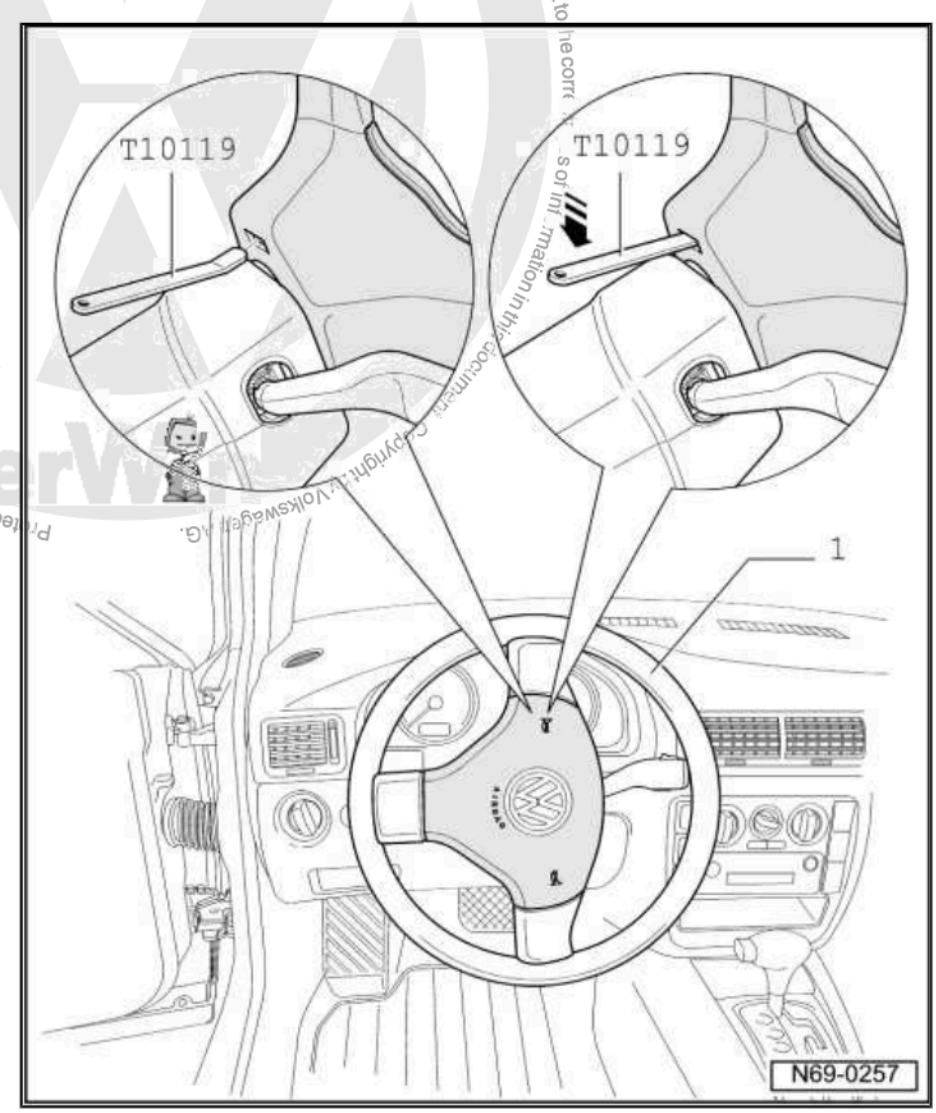

Protected by copyright. Copying for private or commercial purposes, in part or in whole is not permitted unless authorised by Volkswagen AG. Volkswagen AG does not guarantee or accept any liability with respect to the correctness of information in this document. Copyright by Volkswagen AG.

- Release steering column adjuster.
- Rotate --item 1- ⇒ Item 1 (page 50) - steering wheel until steering wheel spoke is vertical. Pull out steering column entirely and push into upper position.
- Secure steering column adjustment.
- Position Airbag Release Tool - T10119- in rectangular opening on rear side of steering wheel.
- Press Airbag Release Tool - T10119- in direction of -arrow- and pull airbag unit out of locking mechanism.
- Turn steering wheel back 180° and disengage second catch on the opposite side.
- Place steering wheel in center position (wheels in straight-ahead position).

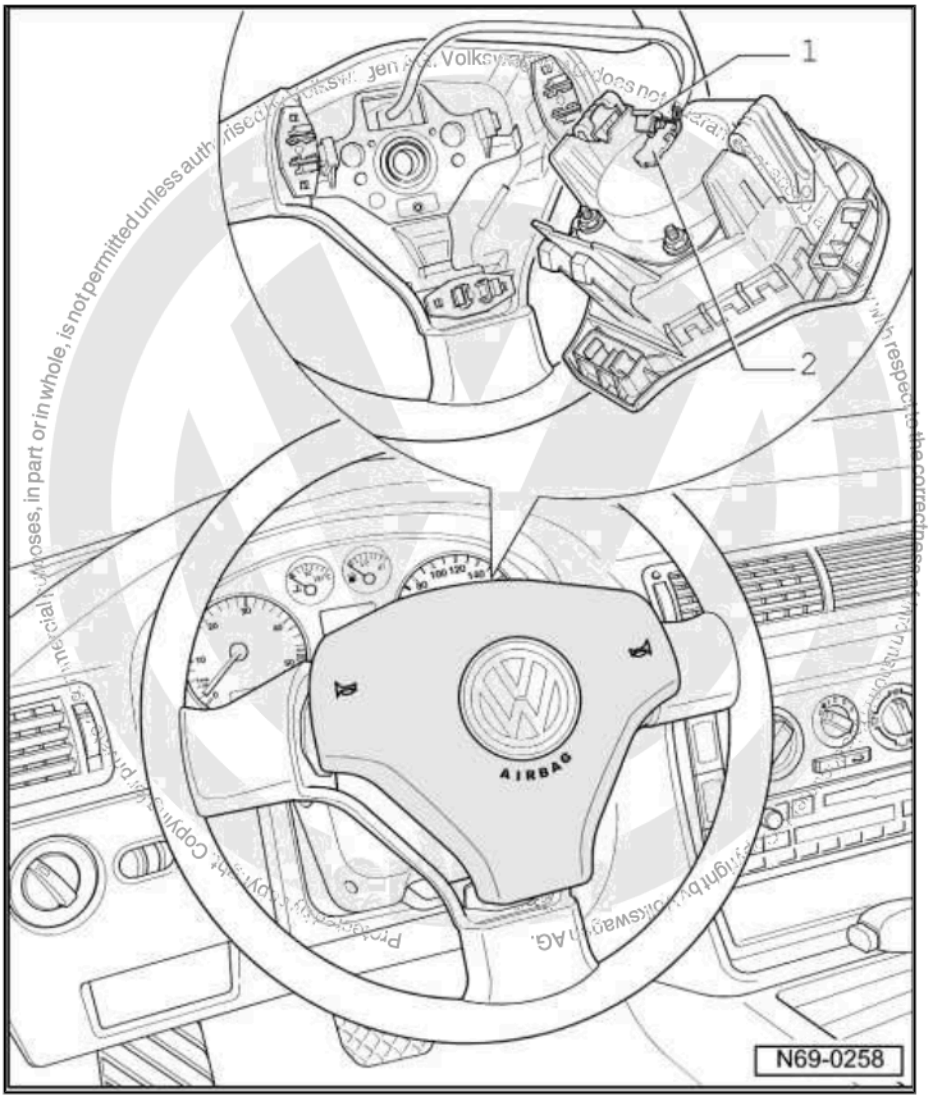

WARNING

Electrostatic discharges can lead to an unintended deployment of the airbag. Therefore the technician must discharge static electricity from the body before separating the ignition and ground wiring. This is done e.g. by briefly touching the body or the door striker or pin.

– Disengage securing clip of harness connector -1- and disconnect connector -2-.

Installing

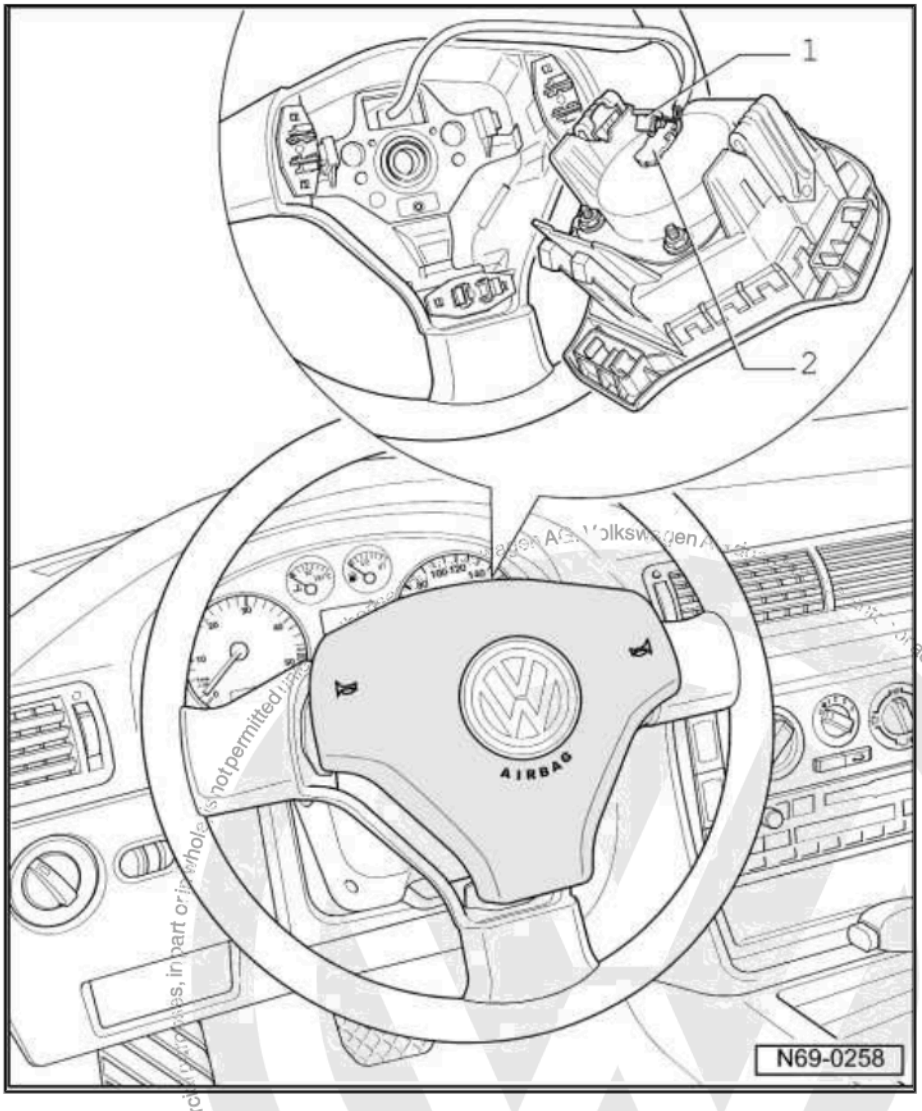

– Connect connector -2- to airbag unit and lock with securing clip -1-.
– Install airbag unit into steering wheel.

Note

Catches of airbag unit must engage audibly!

Protected by copyright. Copying for private or commercial purposes, in part or in whole is not permitted unless authorised by AG Volkswagen AG. Volkswagen AG does not accept any liability with respect to the correctness of information in this document. Copyright by Volkswagen AG.

– Switch on ignition.

> ⚠ WARNING
>
> *Make sure that no one is in the vehicle.*

– Connect vehicle battery. Refer to ⇒ Electrical Equipment; Rep. Gr. 27 ; Removal and Installation

4.8 Steering Wheel

⇒ "4.8.1 Four-Spoke Steering Wheel", page 79

W8 ⇒ "4.8.2 Three-Spoke Steering Wheel", page 81

4.8.1 Four-Spoke Steering Wheel

1 - Steering Wheel

2 - Bolt
- ❑ 60 Nm
- ❑ Coated with locking compound
- ❑ My be used up to five times

Press in a punch indentation after each installation

3 - Bolt
- ❑ 75 Nm
- ❑ Discontinued shortly after start of production

After current supplies are exhausted, only socket head bolts --item 2- ⇒ Item 2 (page 79) - are available as a replacement part

4 - Torx® Screw
- ❑ 5 Nm

5 - Securing Plate

6 - Airbag Unit
- ❑ Because of the differing engaging mechanisms, only steering wheels and airbag units from same supplier can be installed.

7 - Connector

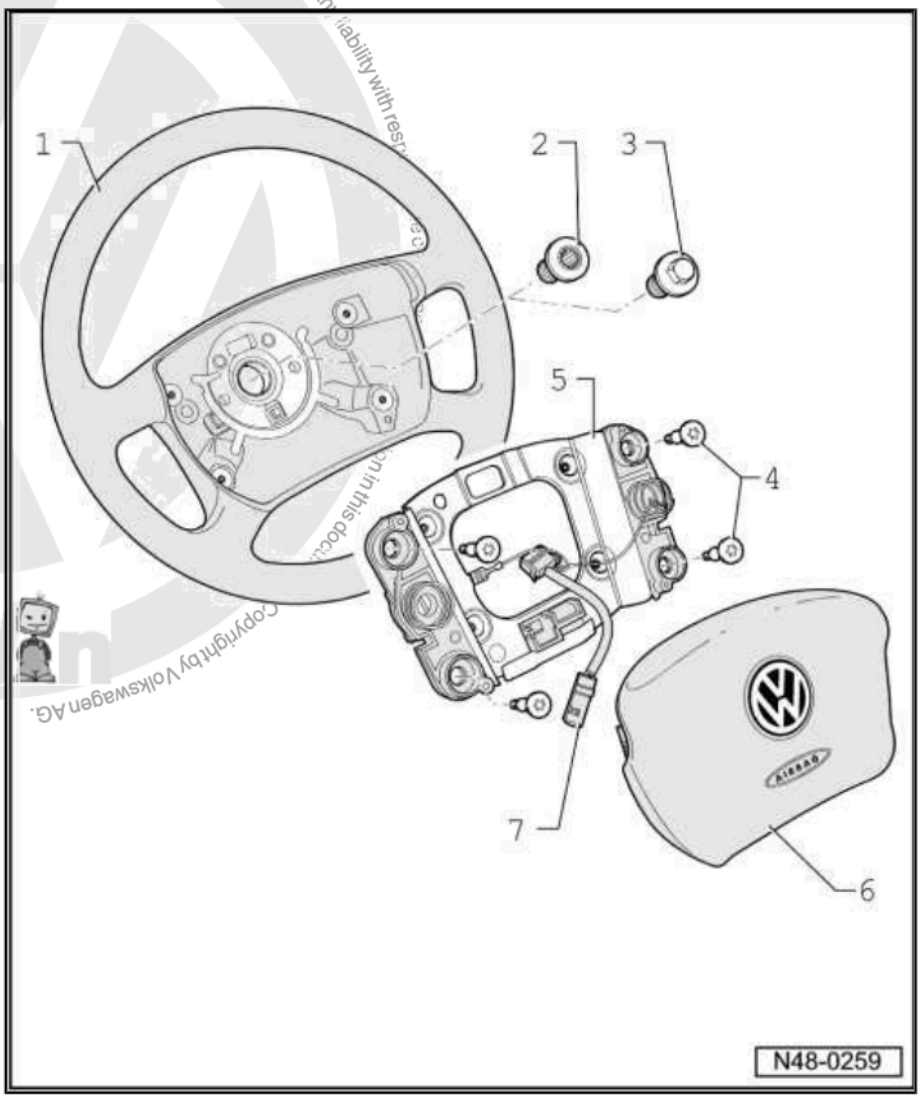

Removing

Copyright by Volkswagen AG. Volkswagen AG does not guarantee or accept any liability with respect to the correctness of information in this document. Copyright by Volkswagen AG. Protected by copyright. Copying for private or commercial purposes, in part or in whole, is not permitted unless authorised by Volkswagen AG.

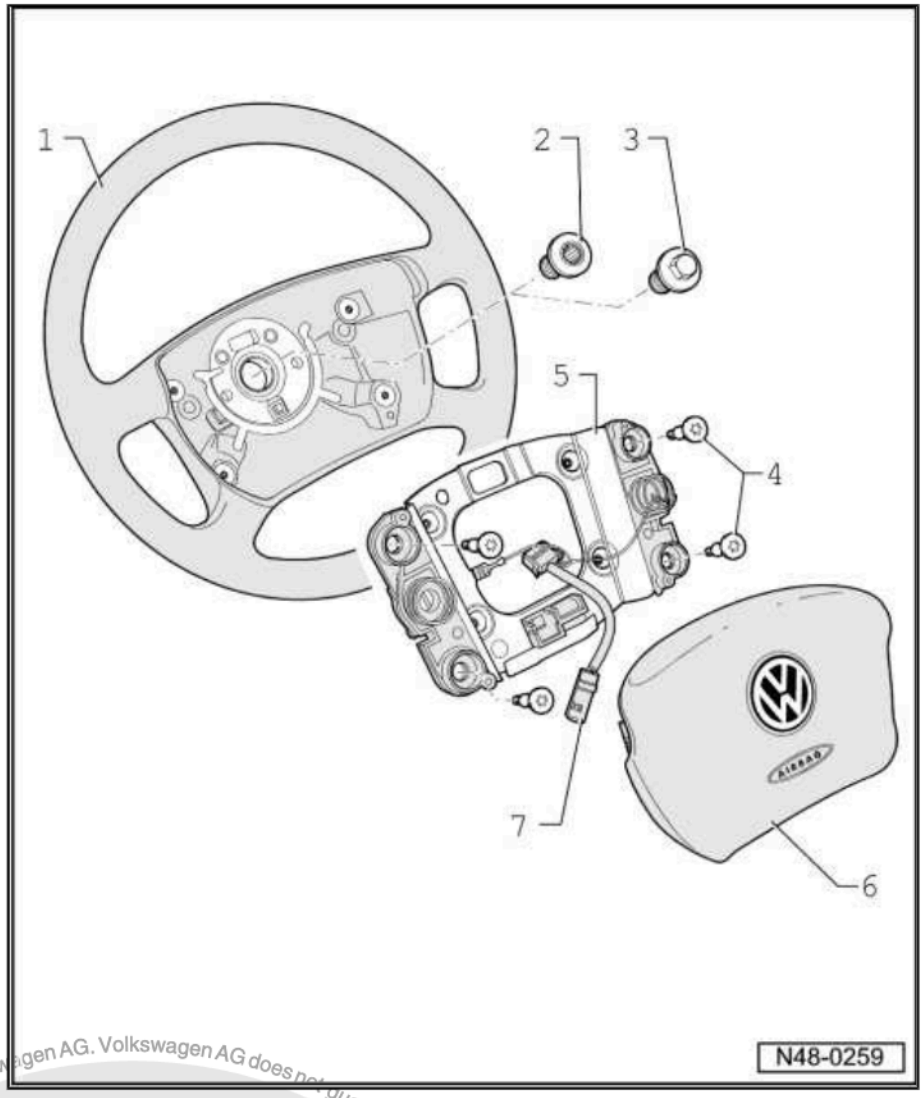

– Remove driver airbag unit. Refer to ⇒ “4.7 Driver Airbag”, page 70 .

– Turn steering wheel -item 1- ⇒ Item 1 (page 50) to center position (wheels in straight-ahead position).

– Remove the hex bolt. Refer to -item 3- ⇒ Item 3 (page 79) or socket head bolt -item 2- ⇒ Item 2 (page 79) and pull steering wheel off steering column.

Installing

To install, perform the steps used in removal in reverse order.

– Mark bolt -item 2- ⇒ Item 2 (page 79) with punch indentation.

– Bolt can be used five times.

Protected by copyright. Copying for private or commercial purposes, in part or in whole, is not permitted unless authorised by Volkswagen AG. Volkswagen AG does not guarantee or accept any liability with respect to the correctness of information in this document. Copyright by Volkswagen AG.

4.8.2 Three-Spoke Steering Wheel

1 - Bolt
- ❑ 60 Nm
- ❑ Coated with locking compound
- ❑ May be used up to five times

Press in a punch indentation after each installation

2 - Steering Wheel

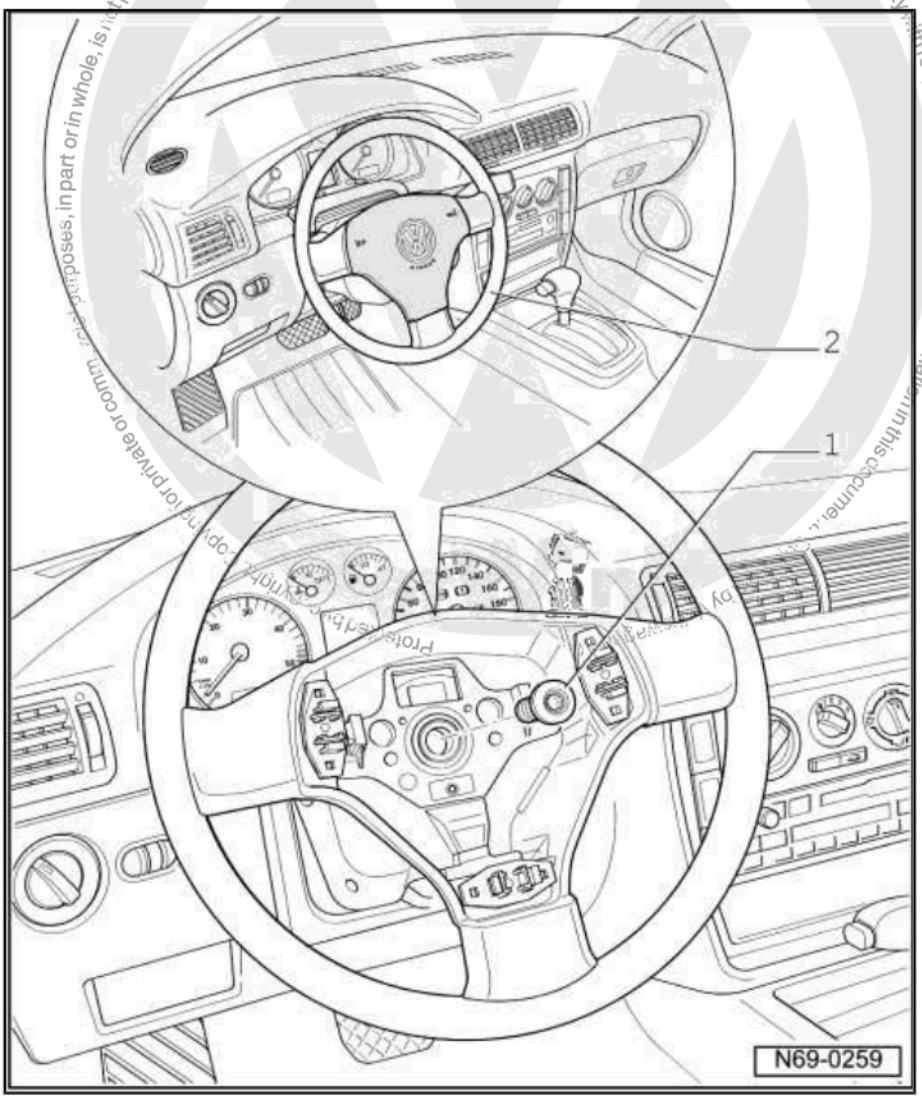

Removing

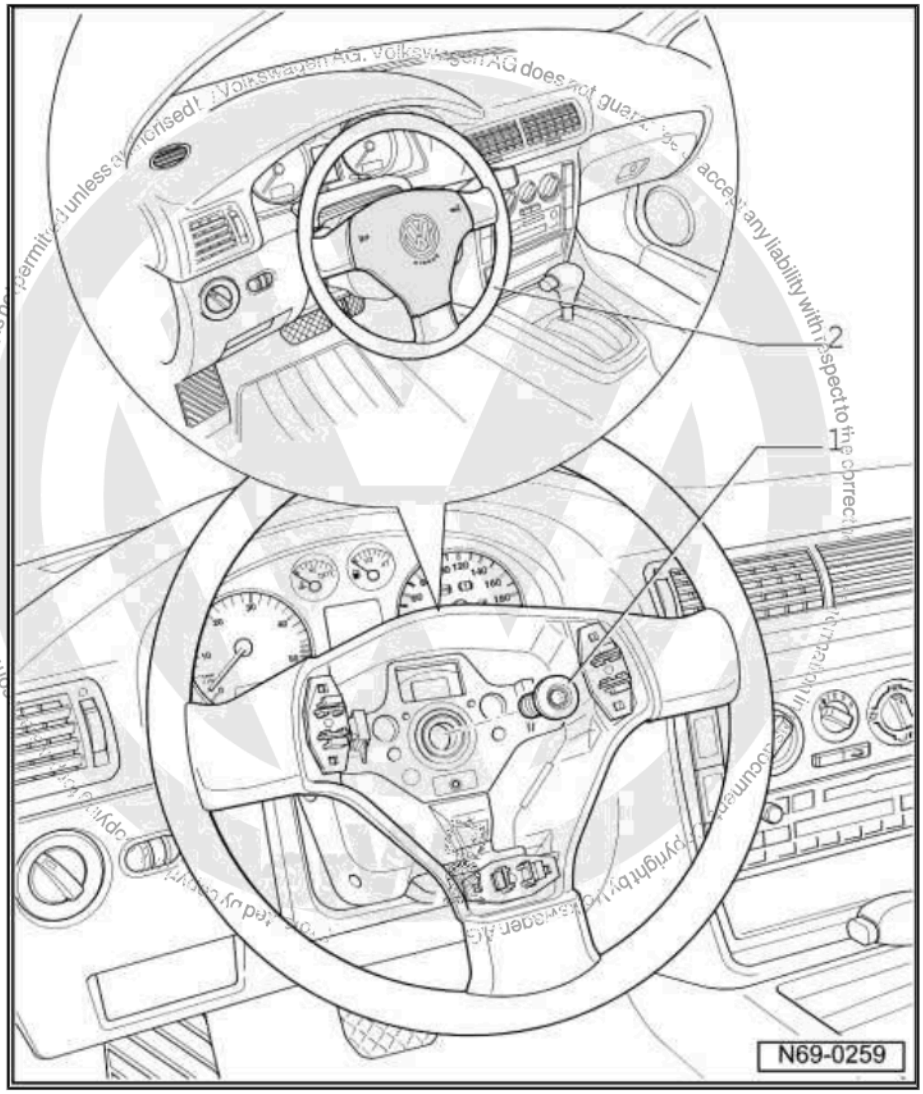

– Remove driver airbag unit.
– Turn steering wheel -2- to center position (wheels in straight-ahead position).
– Remove the socket head bolt -1- and pull steering wheel off steering column.

Installing

To install, perform the steps used in removal in reverse order.

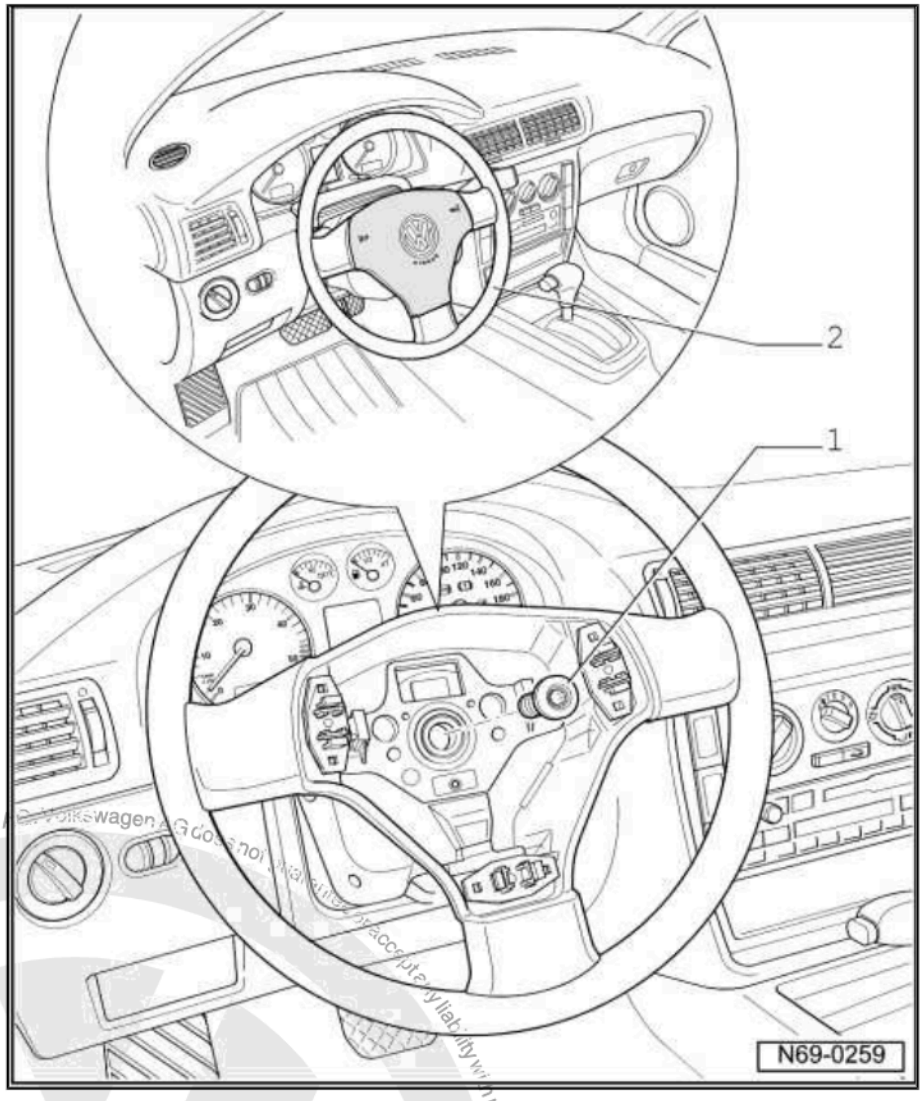

- Mark bolt -1- with punch indentation.
- Bolt can be used five times.

4.9 Airbag Spiral Spring/Return Spring with Slip Ring

Airbag Spiral Spring/Return Spring With Slip Ring -F138- is a construction-specific component of the steering column switch. Refer to ⇒ Electrical Equipment; Rep. Gr. 94 ; Removal and Installation

4.10 Driver/Passenger Side Curtain Airbag, Sedan

Note

Removal and installation is described for the right-hand side of the vehicle. Removal and installation for the left-hand side is performed in the same manner.

Copyright by Volkswagen AG. Copyright. Copying for private and commercial purposes, in part or in whole, is not permitted unless authorised by Volkswagen AG. Volkswagen AG does not guarantee or accept any liability with respect to the correctness of information in this document.

Removing

> ⚠ WARNING
>
> *Observe safety precautions for working on airbags. Refer to ⇒ "1.1 Airbag Safety Precautions", page 27*

- Disconnect vehicle battery. Refer to ⇒ Electrical Equipment; Rep. Gr. 27 ; Removal and Installation
- Remove upper A-pillars trim. Refer to ⇒ "2.3.1 Upper A-Pillar Trim", page 112 .
- Remove upper B-pillars trim, belt end fittings of front seatbelts do not need to be removed while doing so. Refer to ⇒ "2.3.3 Upper B-Pillar Trim", page 115
- Remove upper and lower C/D-pillars trim. Refer to ⇒ "2.3.5 Upper C/D-Pillar Trim, Sedan", page 120
- Remove headliner with slide/tilt sunroof. Refer to ⇒ "2.5 Headliner with Tilt/Slide Sunroof, Sedan", page 151

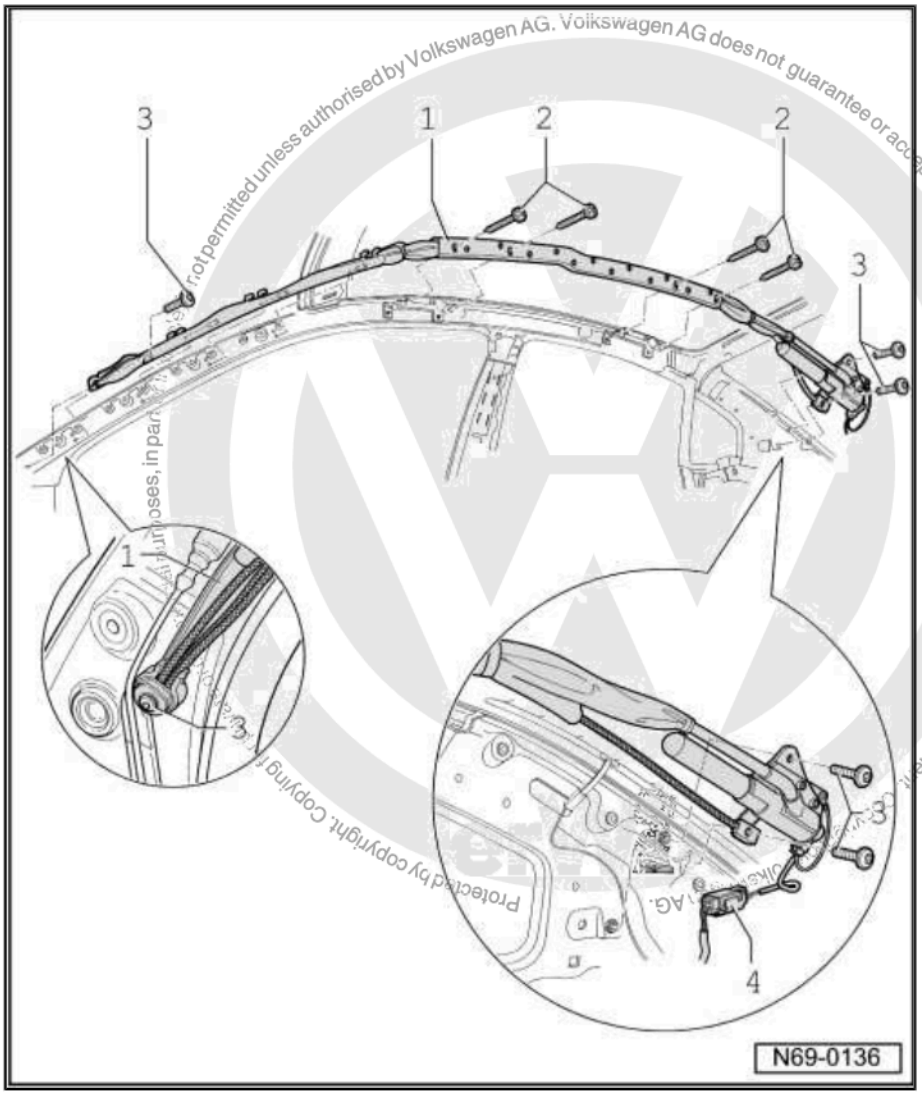

Protected by copyright. Copying for not permitted unless authorised by Volkswagen AG. Volkswagen AG does not guarantee or accept any liability with respect to the correctness of information in this document.

Protected by copyright. Copying for private or commercial purposes, in part or in whole, is not permitted unless authorised by Volkswagen AG. Volkswagen AG does not guarantee or accept any liability with respect to the correctness of information in this document. Copyright by Volkswagen AG.

WARNING

Electrostatic discharges can lead to an unintended deployment of the airbag. Therefore the technician must discharge static electricity from the body before separating the ignition and ground wiring. This is done e.g. by briefly touching the body or the door striker or pin.

- Disconnect connector -4-.
- Remove the bolts -3- and -4- (3 Nm).
- Remove all clips for curtain airbag from body.
- Remove side curtain airbag from vehicle.

Note

All securing bolts -2- and -3- must be replaced before installing.

Installing

- To install, perform the steps used for removal in reverse order.
- Switch on ignition.

WARNING

Make sure that no one is in the vehicle.

- Connect vehicle battery. Refer to ⇒ Electrical Equipment; Rep. Gr. 27 ; Removal and Installation .

4.11 Driver/Passenger Side Curtain Airbag, Wagon

Note

Removal and installation is described for the right-hand side of the vehicle. Removal and installation for the left-hand side is performed in the same manner.

Removing

WARNING

Observe safety precautions for working on airbags . Refer to *⇒ "1.1 Airbag Safety Precautions", page 27*

- Disconnect vehicle battery . Refer to ⇒ Electrical Equipment; Rep. Gr. 27 ; Removal and Installation .
- Remove upper A-pillars trim). Refer to ⇒ "2.3.1 Upper A-Pillar Trim", page 112 .
- Remove upper B-pillars trim, belt end fittings of front seatbelts do not need to be removed while doing so). Refer to ⇒ "2.3.3 Upper B-Pillar Trim", page 115
- Removing upper C-pillars trim.

– Remove upper D-pillars trim.

– Remove headliner with slide/tilt sunroof (Wagon). Refer to
⇒ “2.6 Molded Headliner with Sunroof, Wagon”, page 155

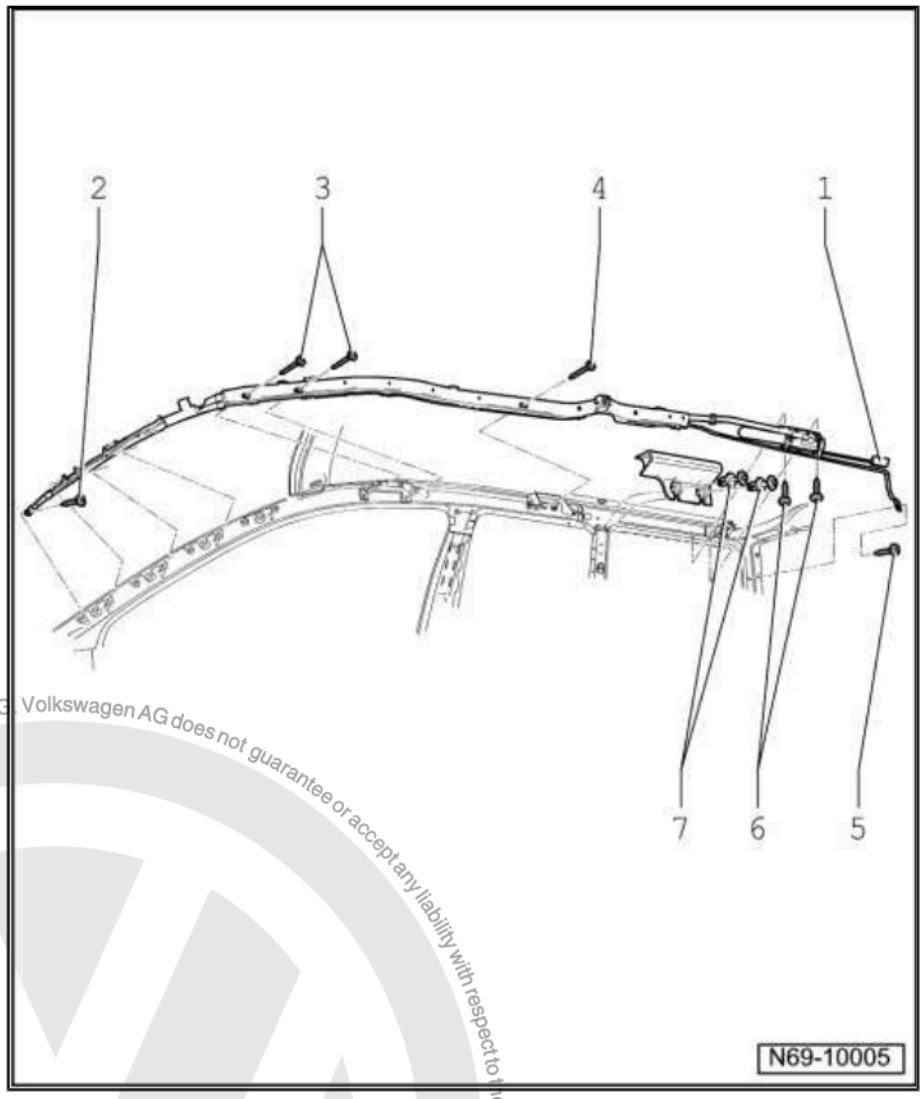

Volkswagen AG does not guarantee or accept any liability with respect to the correctness of information in this document. Copyright by Volkswagen AG.
Protected by copyright. Copying for private or commercial purposes, in part or in whole, is not permitted unless authorised by Volkswagen AG.

⚠ WARNING

Electrostatic discharges can lead to an unintended deployment of the airbag. Therefore the technician must discharge static electricity from the body before separating the ignition and ground wiring. This is done e.g. by briefly touching the body or the door striker or pin.

– Disconnect wiring harness from side curtain airbag -1-.

– Remove bolt -2- (3 Nm).

– Remove the two bolts -3- (3 Nm).

– Remove bolt -4- (3 Nm).

– Remove bolt -5- (3 Nm).

– Remove the two bolts -6- (3 Nm).

– Remove all clips for curtain airbag from body.
– Remove side curtain airbag from vehicle via rear lid.

Note

Securing clips -7-, securing bolts and guide -8- must be replaced before installing.

Installing

– To install, perform the steps used for removal in reverse order.
– Switch on ignition.

WARNING

Make sure that no one is in the vehicle.

– Connect vehicle battery). Refer to ⇒ Electrical Equipment; Rep. Gr. 27 ; Battery .

4.12 Deformation Elements

⇒ "4.12.1 Deformation Elements, Sideways, Sedan without Sunroof", page 87

⇒ "4.12.2 C-pillar Deformation Elements, Sedan", page 88

⇒ "4.12.3 Deformation Elements, Side Curtain Airbag, Sedan without Sunroof", page 89

⇒ "4.12.4 Side Deformation Elements, Wagon without Sunroof", page 90

⇒ "4.12.5 Headliner Retrofitting, Sedan without Sunroof", page 92

⇒ "4.12.6 Headliner Retrofitting, Sedan with Sunroof", page 93

⇒ "4.12.7 Tilt/Slide Sunroof Installation Unit Retrofitting", page 95

⇒ "4.12.8 Headliner Retrofitting, Wagon with Sunroof", page 96

4.12.1 Deformation Elements, Sideways, Sedan without Sunroof

Note

- *Removal and installation is described for passenger side of vehicle. The same instructions apply for removal and installation for the driver side.*
- *Deformation elements are components of US vehicles.*

Removing

– Remove headliner Sedan). Refer to
⇒ "2.5 Headliner with Tilt/Slide Sunroof, Sedan", page 151 .

– Remove driver side and passenger side curtain airbags (Sedan). Refer to
⇒ "4.10 Driver/Passenger Side Curtain Airbag, Sedan", page 83

Protected by copyright. Copyright by Volkswagen AG. Copyright by Volkswagen AG. Volkswagen AG does not guarantee or accept any liability with respect to the correctness of information in this document. Copying for private or commercial purposes, in part or in whole, is not permitted unless authorised by Volkswagen AG.

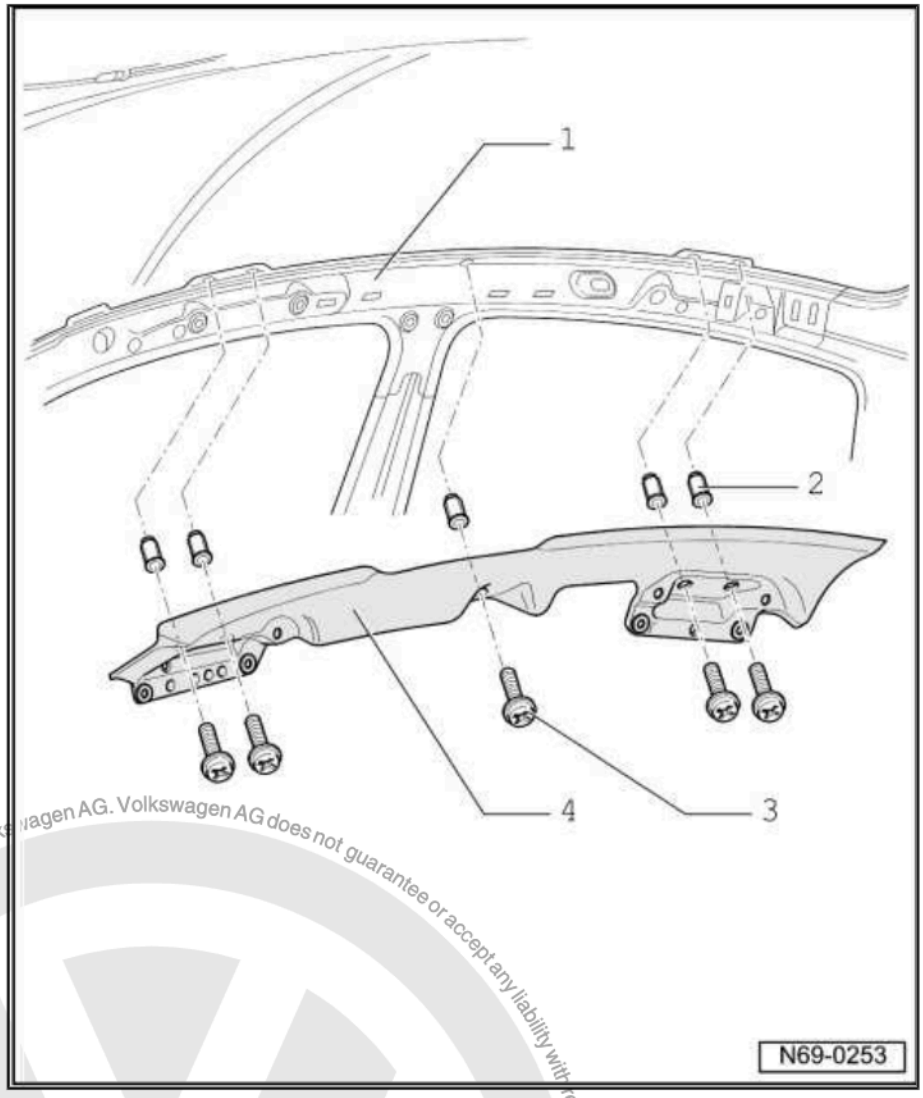

– Remove bolts -3- (3 Nm).
– Remove deformation element -4-.

Installing

– To install, perform the steps used for removal in reverse order.

4.12.2 C-pillar Deformation Elements, Sedan

Note

- *Removal and installation is described for passenger side of vehicle. The same instructions apply for removal and installation for the driver side.*
- *Deformation elements are components of US vehicles.*

Removing

– Remove headliner Sedan. Refer to
⇒ "2.5 Headliner with Tilt/Slide Sunroof, Sedan", page 151 .

Protected by copyright. Copyright by Volkswagen AG. Volkswagen AG does not guarantee or accept any liability with respect to the correctness of information in this document. Copyright by Volkswagen AG. Copying for private or commercial purposes, in part or in whole, is not permitted unless authorised by Volkswagen AG.

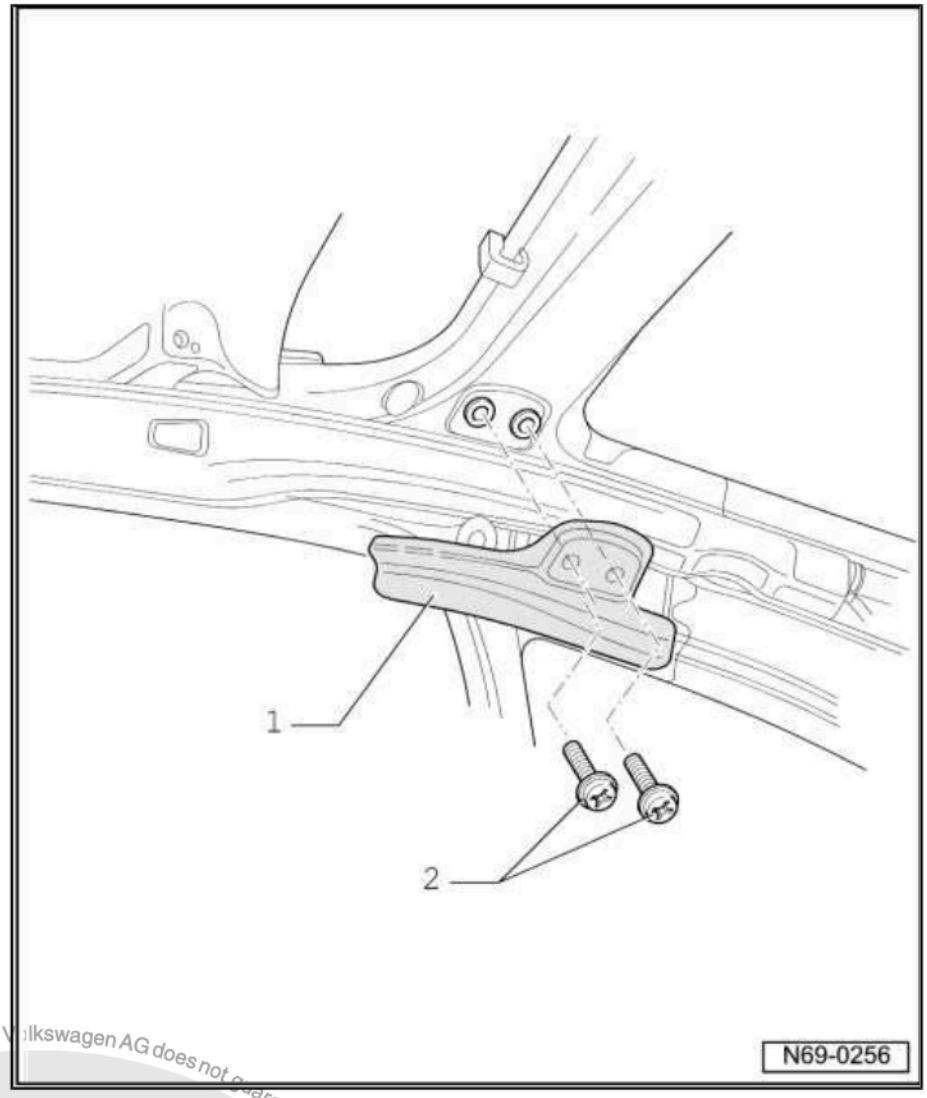

– Remove the bolts -2-.

– Remove deformation element -1-.

Installing

– To install, perform the steps used for removal in reverse order.

4.12.3 Deformation Elements, Side Curtain Airbag, Sedan without Sunroof

Note

- *The deformation element is screwed to the side curtain airbag in the area of the front roof grab handle.*
- *Removal and installation is described for passenger side of vehicle. The same instructions apply for removal and installation for the driver side.*
- *Deformation elements are components of US vehicles.*

Removing

– Remove headliner Sedan. Refer to ⇒ “2.5 Headliner with Tilt/Slide Sunroof, Sedan”, page 151 .

Protected by copyright. Copyright by Volkswagen AG. Volkswagen AG does not guarantee or accept any liability with respect to the correctness of information in this document. Copyright by Volkswagen AG. Protected by copyright. Copying for private or commercial purposes, in part or in whole, is not permitted unless authorised by Volkswagen AG.

– Remove headliner Wagon. Refer to
⇒ “2.6 Molded Headliner with Sunroof, Wagon”, page 155 .

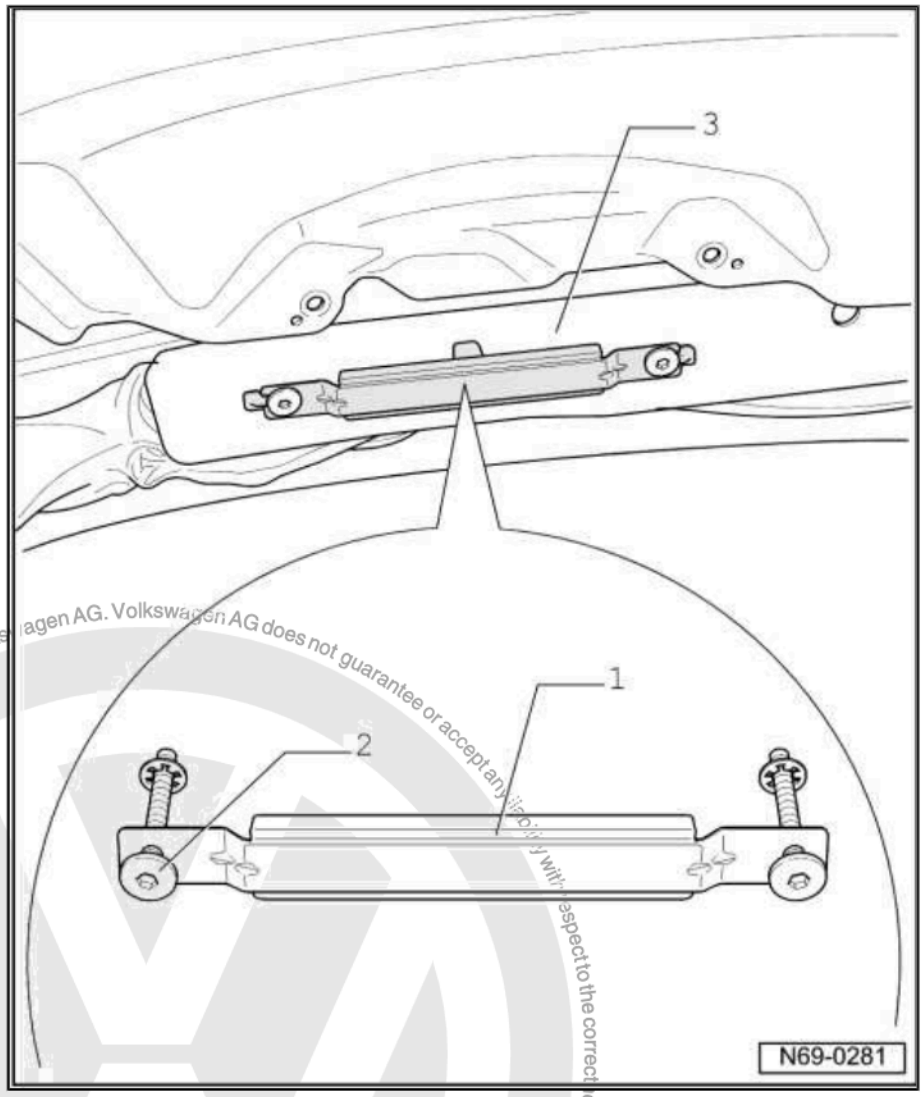

– Remove the bolts -2-.

– Remove deformation element -1-.

Installing

– To install, perform the steps used for removal in reverse order.

4.12.4 Side Deformation Elements, Wagon without Sunroof

Note

♦ *Removal and installation is described for passenger side of vehicle. The same instructions apply for removal and installation for the driver side.*

♦ *Deformation elements are components of US vehicles.*

Protected by copyright. Copying for private or commercial purposes, in part or in whole, is not permitted unless authorised by Volkswagen AG. Volkswagen AG does not guarantee or accept any liability with respect to the correctness of information in this document. Copyright by Volkswagen AG.

Removing

– Remove headliner Wagon. Refer to
⇒ “2.6 Molded Headliner with Sunroof, Wagon”, page 155 .

– Remove driver side and passenger side curtain airbags (Wagon). Refer to
⇒ “4.11 Driver/Passenger Side Curtain Airbag, Wagon”, page 85

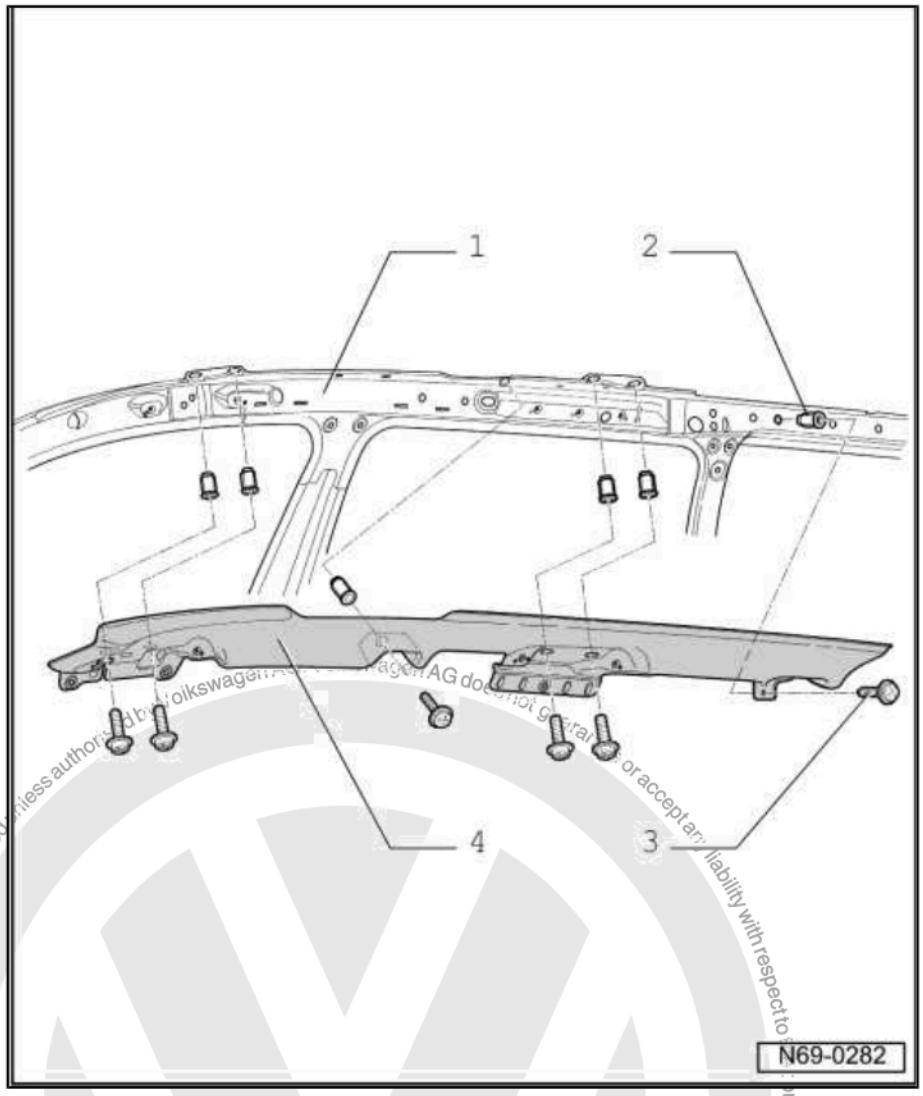

– Remove the bolts -3-.

– Remove deformation element -4-.

Installing

– To install, perform the steps used for removal in reverse order.

Protected by copyright. Copying for private or commercial purposes, in part or in whole, is not permitted unless authorised by Volkswagen AG. Volkswagen AG does not guarantee or accept any liability with respect to the correctness of information in this document. Copyright by Volkswagen AG.

4.12.5 Headliner Retrofitting, Sedan without Sunroof

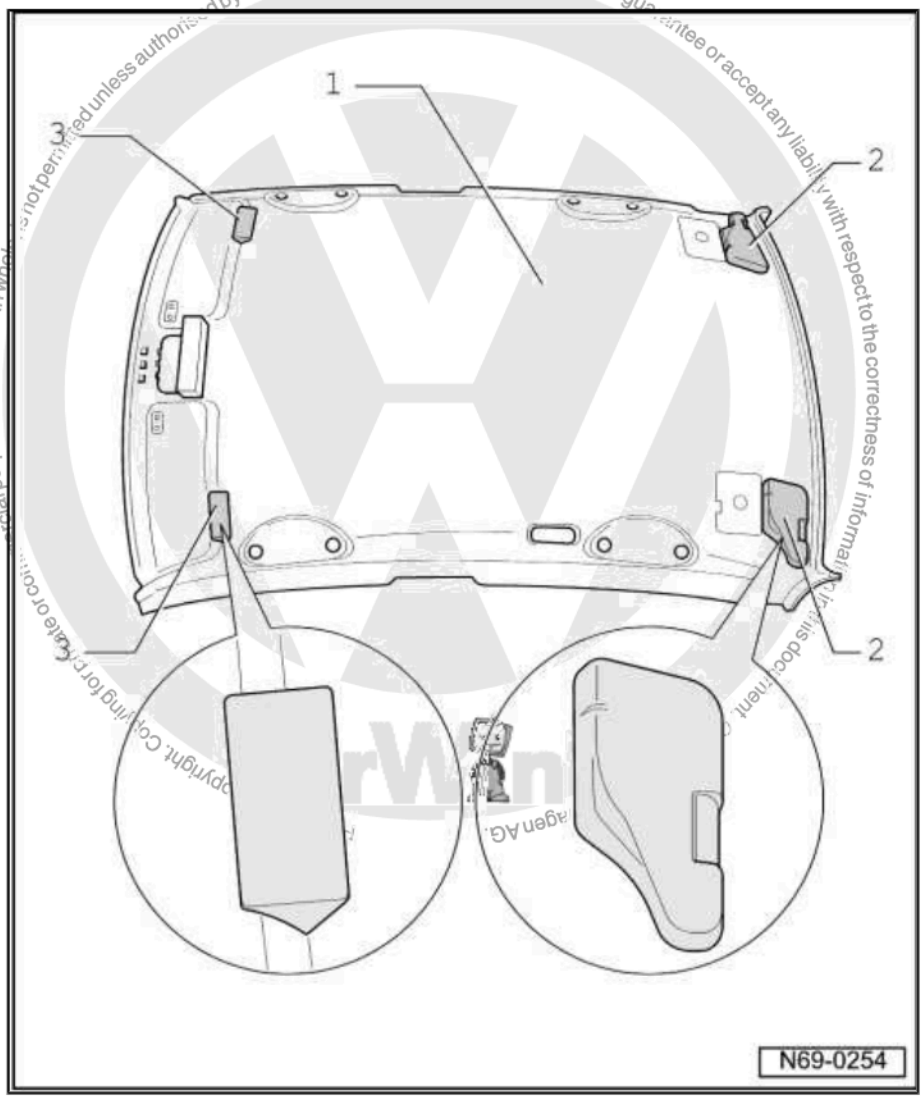

Copyright. Copying for private or commercial purposes, in part or in whole, is not permitted unless authorised by Volkswagen AG. Volkswagen AG does not guarantee or accept any liability with respect to the correctness of information in this document.

Note

- *The deformation elements are bonded with butyl adhesive sealing cord AKL 450 005 05.*
- *It is not possible to remove deformation elements without damaging them.*
- *Deformation elements must be replaced after removal.*
- *Deformation elements are components of US vehicles.*

Protected by copyright. Copyright by Volkswagen AG. Volkswagen AG does not guarantee or accept any liability with respect to the correctness of information in this document. Copyright by Volkswagen AG. authorised by Volkswagen AG, is not permitted under, in part or in whole, is not permitted for commercial purposes, in part or in whole, is not permitted

Installing

– Marking -arrow- for butyl adhesive sealing cord, deformation element, front.

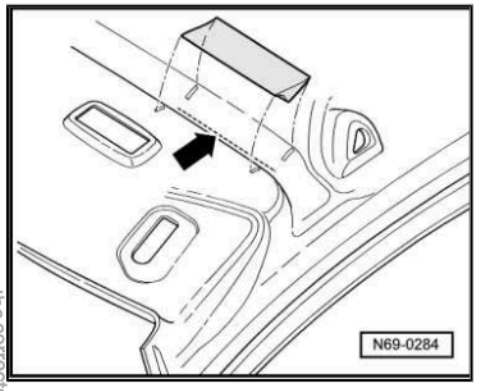

– Marking -arrows- for butyl adhesive sealing cord, deformation element, rear.

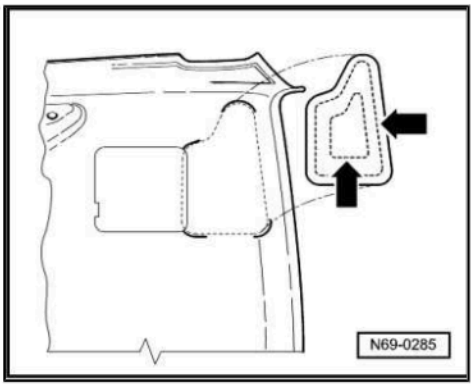

4.12.6 Headliner Retrofitting, Sedan with Sunroof

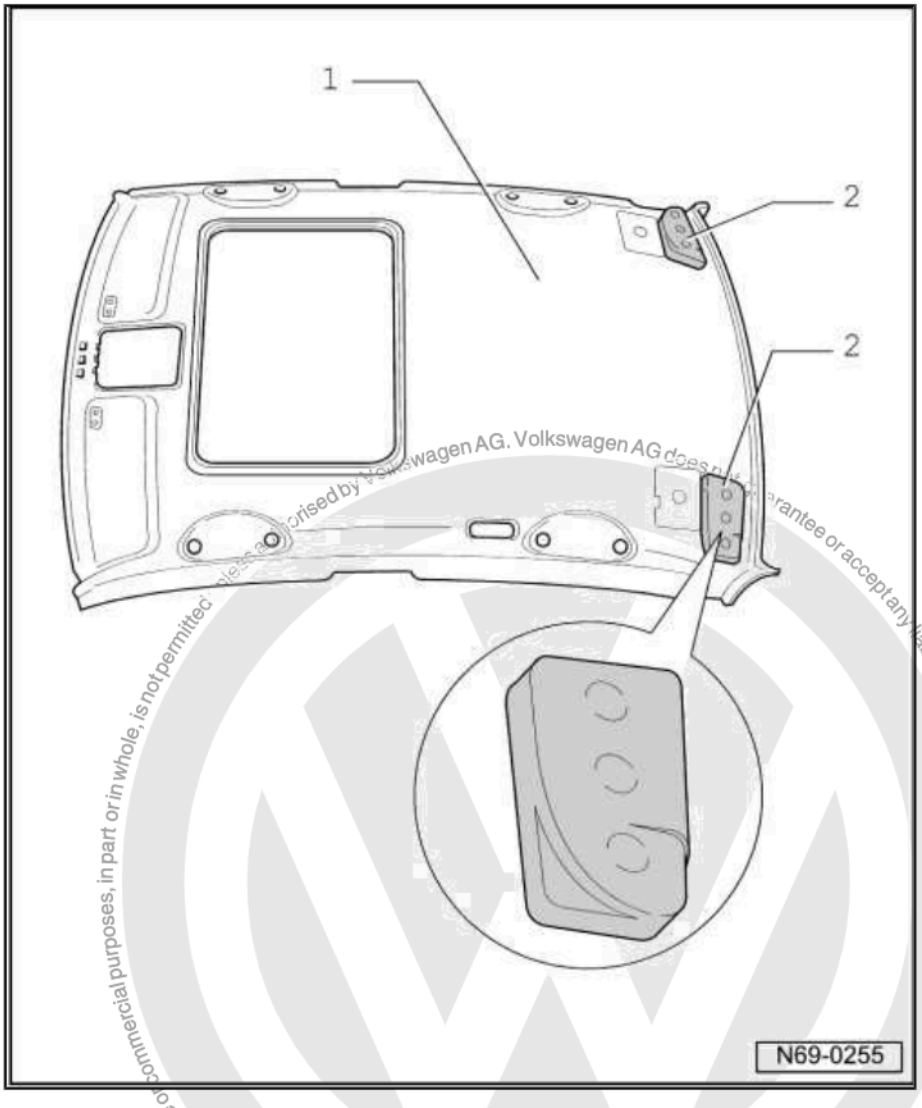

Copyright by Volkswagen AG. Volkswagen AG does not guarantee or accept any liability with respect to the correctness of information in this document. Copyright by Volkswagen AG. Reproduction, in whole or in part, is not permitted without authorised by Volkswagen AG. Copying for private or commercial purposes, in part or in whole, is not permitted

Note

- *The deformation elements are bonded with butyl adhesive sealing cord AKL 450 005 05.*
- *It is not possible to remove deformation elements without damaging them.*
- *Deformation elements must be replaced after removal.*
- *Deformation elements are components of US vehicles.*

Installing

– Marking -arrows- for butyl adhesive sealing cord, deformation element, rear.

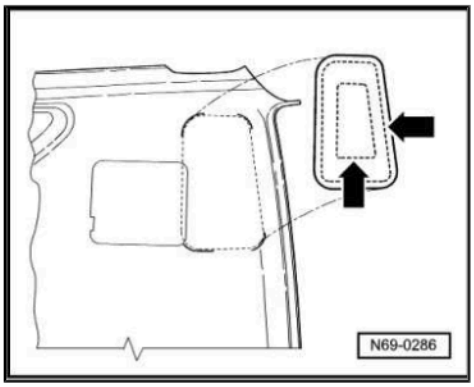

Protected by copyright. Copying for private or commercial purposes, in part or in whole, is not permitted unless authorised by Volkswagen AG. Volkswagen AG does not guarantee or accept any liability with respect to the correctness of information in this document. Copyright by Volkswagen AG.

4.12.7 Tilt/Slide Sunroof Installation Unit Retrofitting

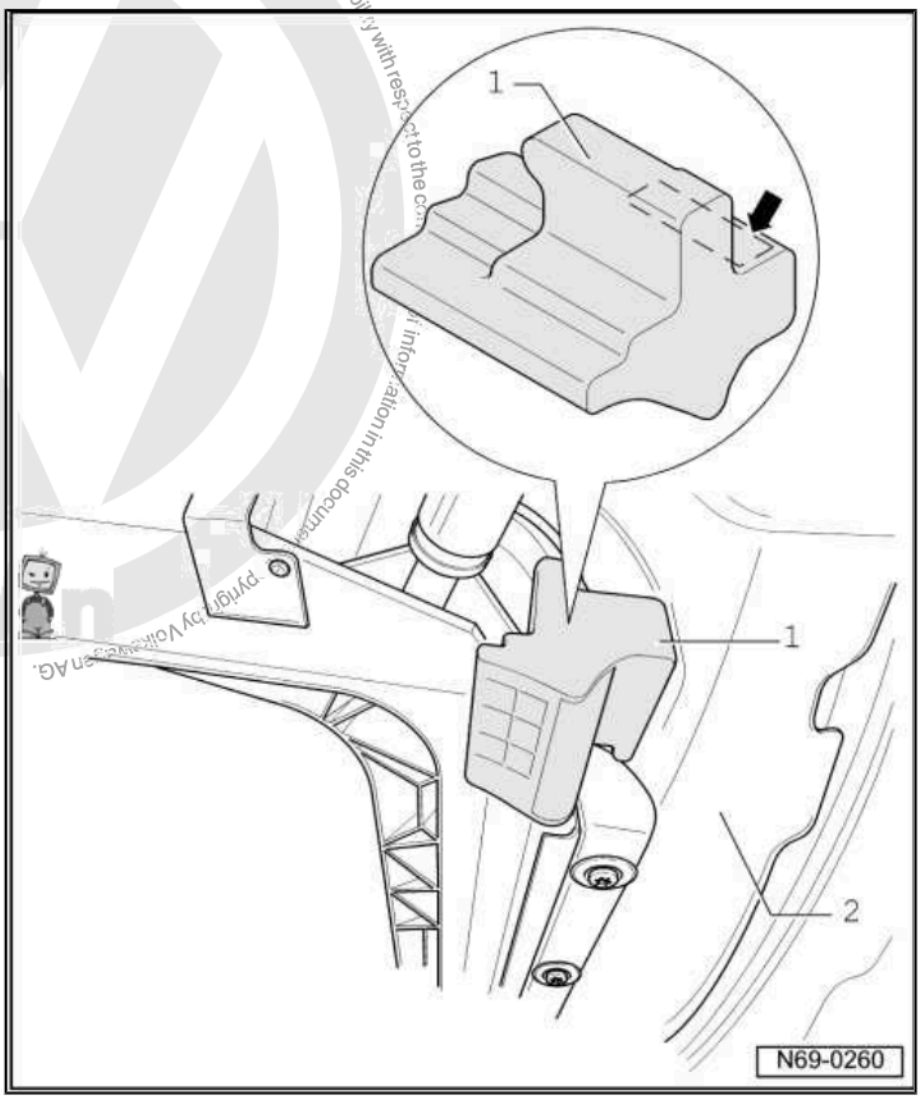

Note

- *Retrofitting of deformation elements is described for the passenger side. Retrofitting the deformation element on the driver side is identical.*
- *It is not possible to remove deformation elements without damaging them.*
- *Deformation elements must be replaced after removal.*
- *Deformation elements are components of US vehicles.*

Retrofitting

– Remove foil -arrow- and adhere deformation element to installation unit, slide/tilt sunroof.

4.12.8 Headliner Retrofitting, Wagon with Sunroof

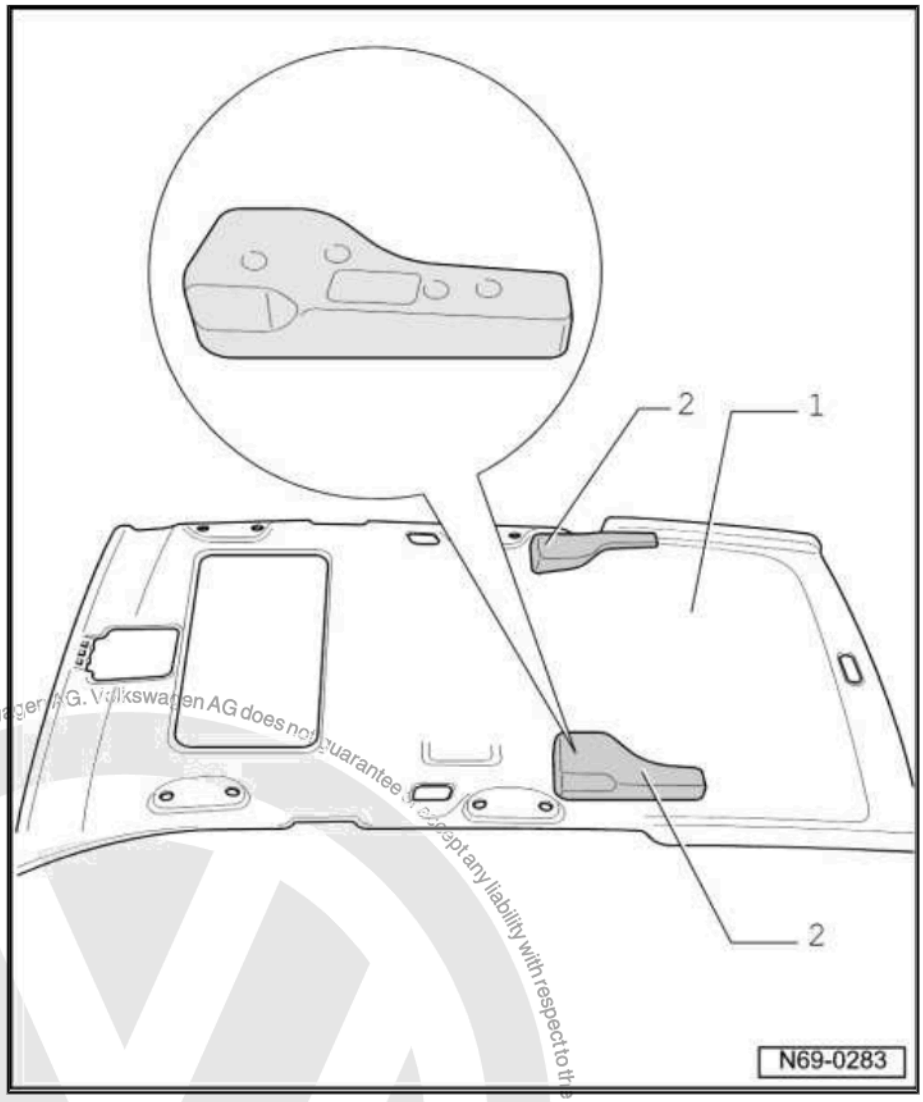

Note

- *The deformation elements are bonded with butyl adhesive sealing cord AKL 450 005 05.*
- *It is not possible to remove deformation elements without damaging them.*
- *Deformation elements must be replaced after removal.*
- *Deformation elements are components of US vehicles.*

Protected by copyright. Copying for private or commercial purposes, in part or in whole, is not permitted unless authorised by Volkswagen AG. Volkswagen AG does not guarantee or accept any liability with respect to the correctness of information in this document. Copyright by Volkswagen AG.

Installing

– Marking -arrows- for butyl adhesive sealing cord, deformation element, rear.

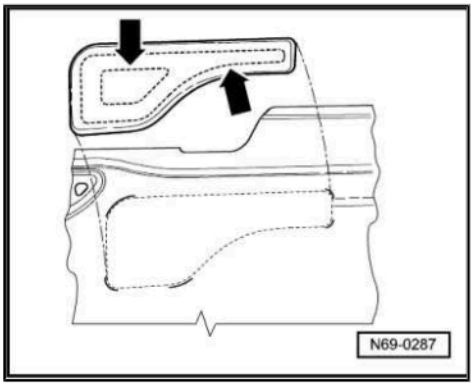

Protected by copyright. Copying for private or commercial purposes, in part or in whole, is not permitted unless authorised by Volkswagen AG. Volkswagen AG does not guarantee or accept any liability with respect to the correctness of information in this document. Copyright by Volkswagen AG.

5 Special Tools

Special tools and workshop equipment required

- Airbag Release Tool - T10119-

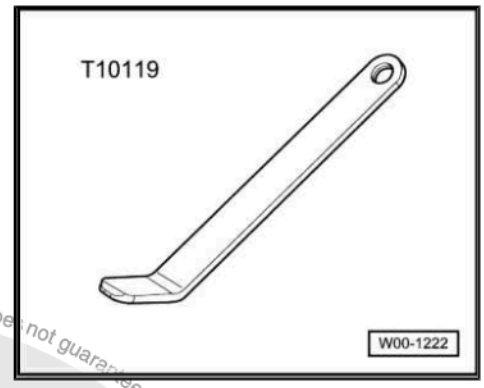

- Pop Rivet Pliers - VAG1765B-

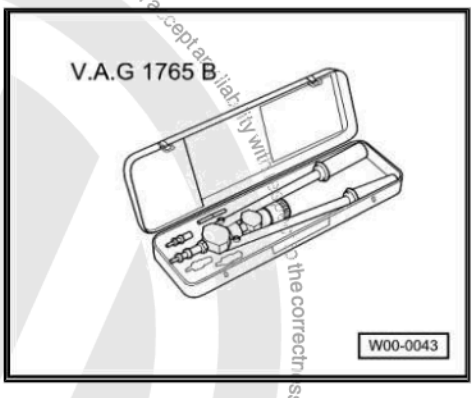

- Diagnostic Cable - VAS5051/1- or Diagnostic Cable - VAS5051/3-
- Airbag Lockout Adapter - VAS5061-

Protected by copyright. Copying for private or commercial purposes, in part or in whole, is not permitted unless authorised by Volkswagen AG. Volkswagen AG does not guarantee or accept any liability with respect to the correctness of information in this document. Copyright by Volkswagen AG.

70 – Interior Trim

1 Description and Operation

⇒ “1.1 Overview - Luggage Compartment Trim, Wagon”, page 99

1.1 Overview - Luggage Compartment Trim, Wagon

1 - Trim
2 - Spreader Clip
3 - Tie-Down Screws
4 - Tie-Downs
5 - Bolts

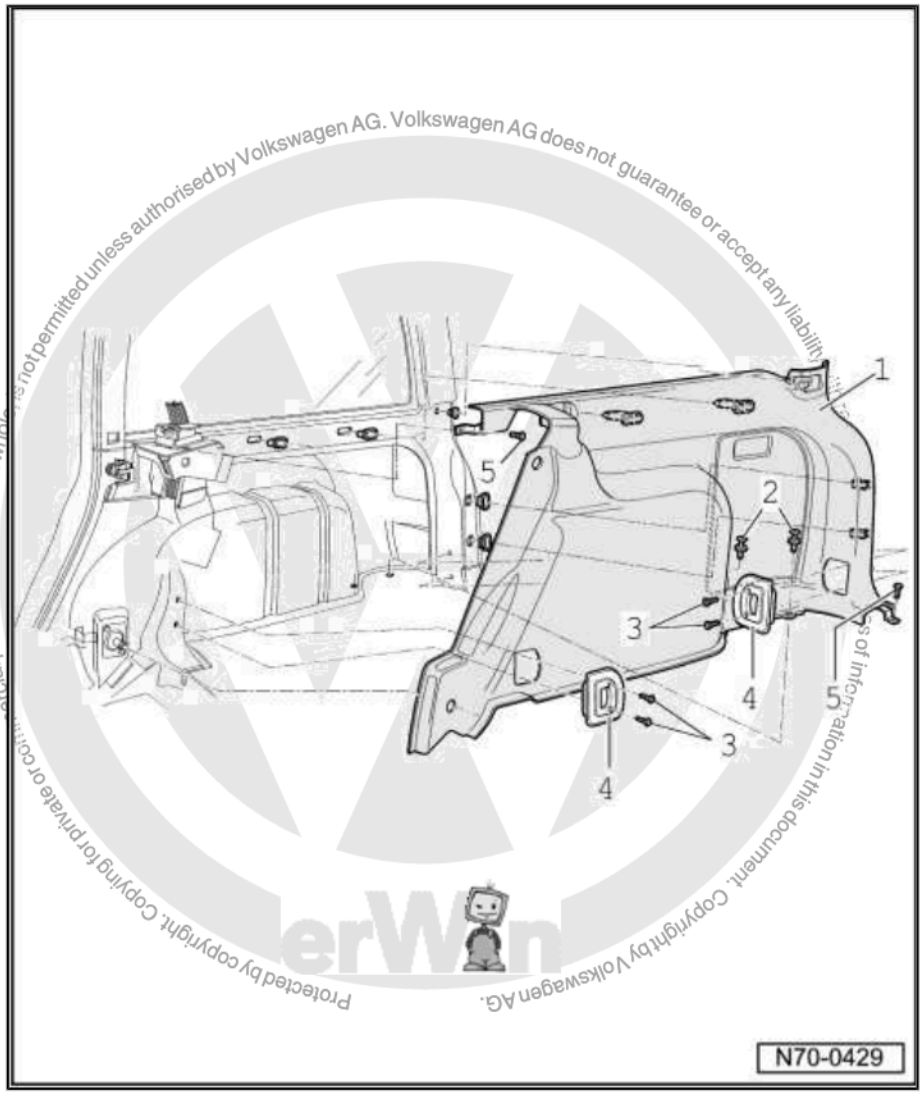

Protected by copyright. Copying for private or commercial purposes, in part or in whole, is not permitted unless authorised by Volkswagen AG. Volkswagen AG does not guarantee or accept any liability with respects to the correctness of information in this document. Copyright by Volkswagen AG.

2 Removal and Installation

⇒ “2.1 Instrument Panel”, page 100

⇒ “2.2 Door Trim”, page 107

⇒ “2.3 Pillar and Side Trim”, page 112

⇒ “2.4 Luggage Compartment Trim”, page 132

⇒ “2.5 Headliner with Tilt/Slide Sunroof, Sedan”, page 151

⇒ “2.6 Molded Headliner with Sunroof, Wagon”, page 155

2.1 Instrument Panel

Removing

– Disconnect vehicle battery. Refer to⇒ Electrical Equipment; Rep. Gr. 27 ; Removal and Installation

– Remove center console. Refer to ⇒ “2.2.1 Center Console”, page 11 .

– Remove driver airbag unit. Refer to ⇒ “4.7 Driver Airbag”, page 70 .

– Remove steering wheel. Refer to ⇒ “4.8 Steering Wheel”, page 79

– Remove the screws -arrows-.

– Remove upper trim for steering column switches -1-.

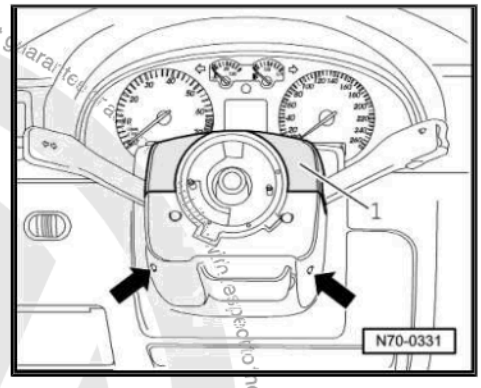

– Remove the screws -arrows-.

– Remove hex socket head bolt -1-.

– Loosen height adjustment for steering wheel -2-.

– Remove lower trim for steering column switch -3-.

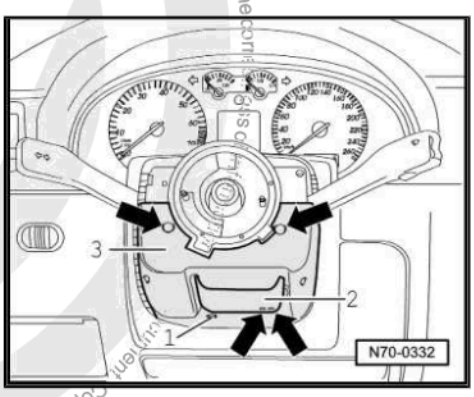

Protected by copyright. Copying for private or commercial purposes, in part or in whole, is not permitted unless authorised by Volkswagen AG. Volkswagen AG does not guarantee or accept any liability with respect to the correctness of information in this repair manual. Copyright by Volkswagen AG.

– Remove socket head bolt -1-.
– Disconnect harness connectors -arrows- from steering column switch.
– Remove steering column switches -2-.

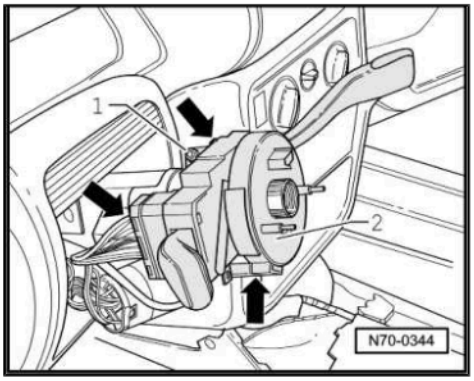

– Pry off cap -1-.
– Remove bolts -2- and -3-.
– Unclip lower A-pillar trim on driver side -4- from sill trim and remove.

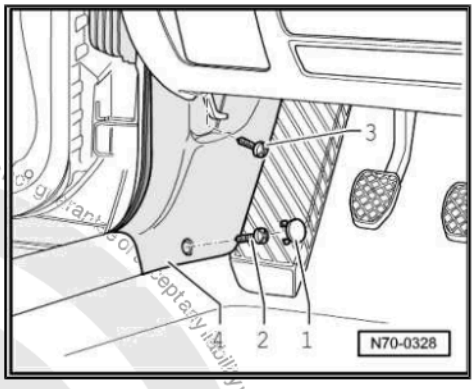

– Unclip cover -1-.
– Remove bolts -arrows-.
– Remove storage compartment on driver side -2-.
– Disconnect harness connectors from light switch -3- and from headlight beam adjuster -4-.

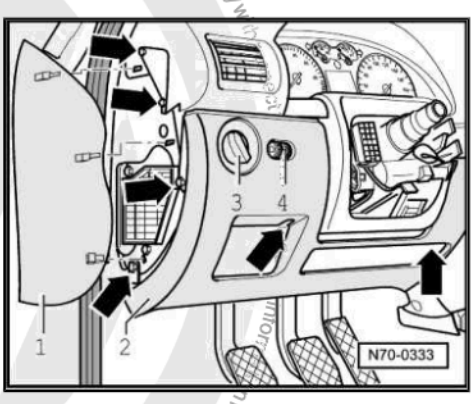

– Slide cover -1- upward and secure with aid (e.g. screwdriver handle) -2-.
– Remove four bolts -arrows-.
– Remove cover -3-.

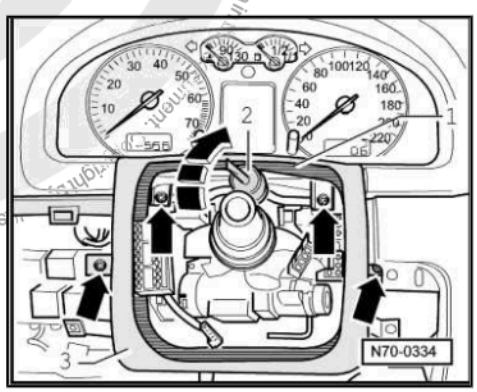

Protected by copyright. Copying for private or commercial purposes, in part or on whole, is not permitted unless authorised by Volkswagen AG. Volkswagen AG does not give any warranty or accept any liability with respect to the correctness and completeness of this document.

– Remove the two bolts -arrows-.
– Remove instrument cluster.
– Disconnect connectors.

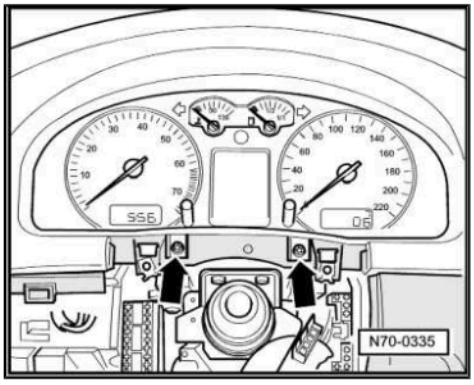

– Remove the two bolts -arrows-.

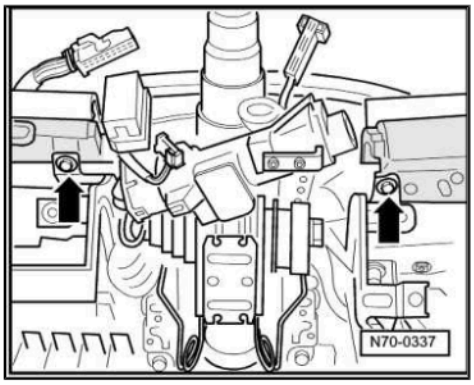

The Radio Removal Tool - 3316- is needed to remove the radio.

The Radio Removal Tool - 3316- consists of two of the same individual parts.

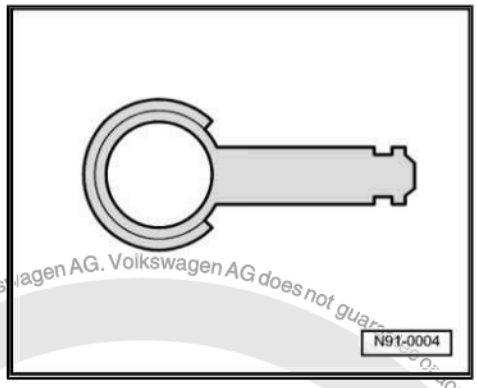

– Slide Radio Removal Tool - 3316- into release slots -arrows- until they engage.

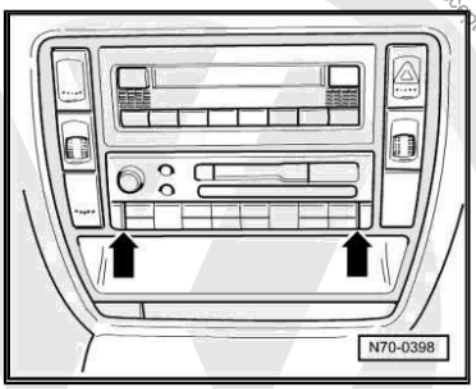

Protected by copyright. Copying for private or commercial purposes, in part or in whole, is not permitted unless authorised by Volkswagen AG. Volkswagen AG does not guarantee or accept any liability with respect to the correctness of information in this document. Copyright by Volkswagen AG.

– Remove radio from instrument panel at release tool grip eyes.

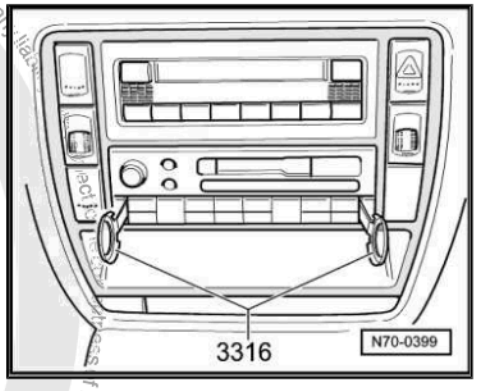

Note

- *The Radio Removal Tool - 3316- must not be pushed to the side or tilted during procedure.*
- *To remove release tool, the side retaining tabs on radio unit must be pressed inward.*

– Remove connectors.

– Unclip trim -1-.

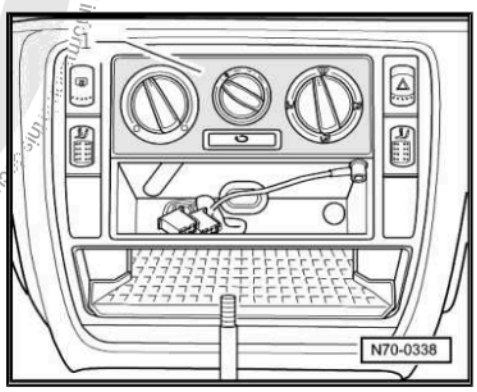

– Remove eight bolts -arrows-.

– Remove center instrument panel cover -1- and remove connectors.

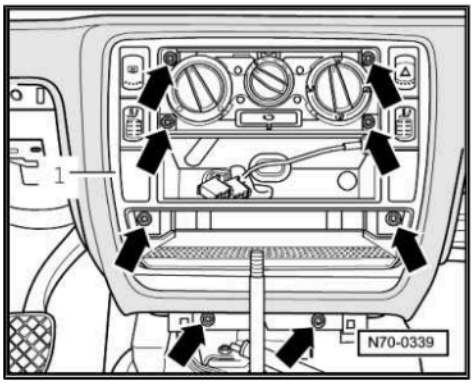

– Remove the five bolts -arrows-.

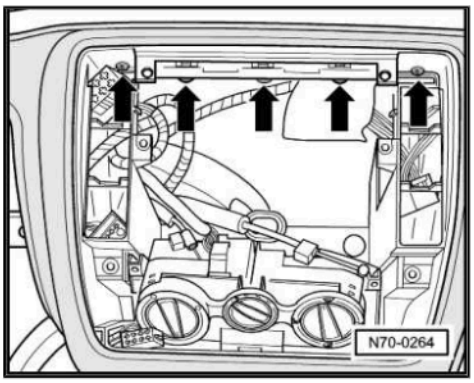

Protected by copyright. Copying for private or commercial purposes, in part or in whole, is not permitted unless authorised by Volkswagen AG. Volkswagen AG does not guarantee or accept any liability with respect to the correctness of information in this document. Copyright by Volkswagen AG.

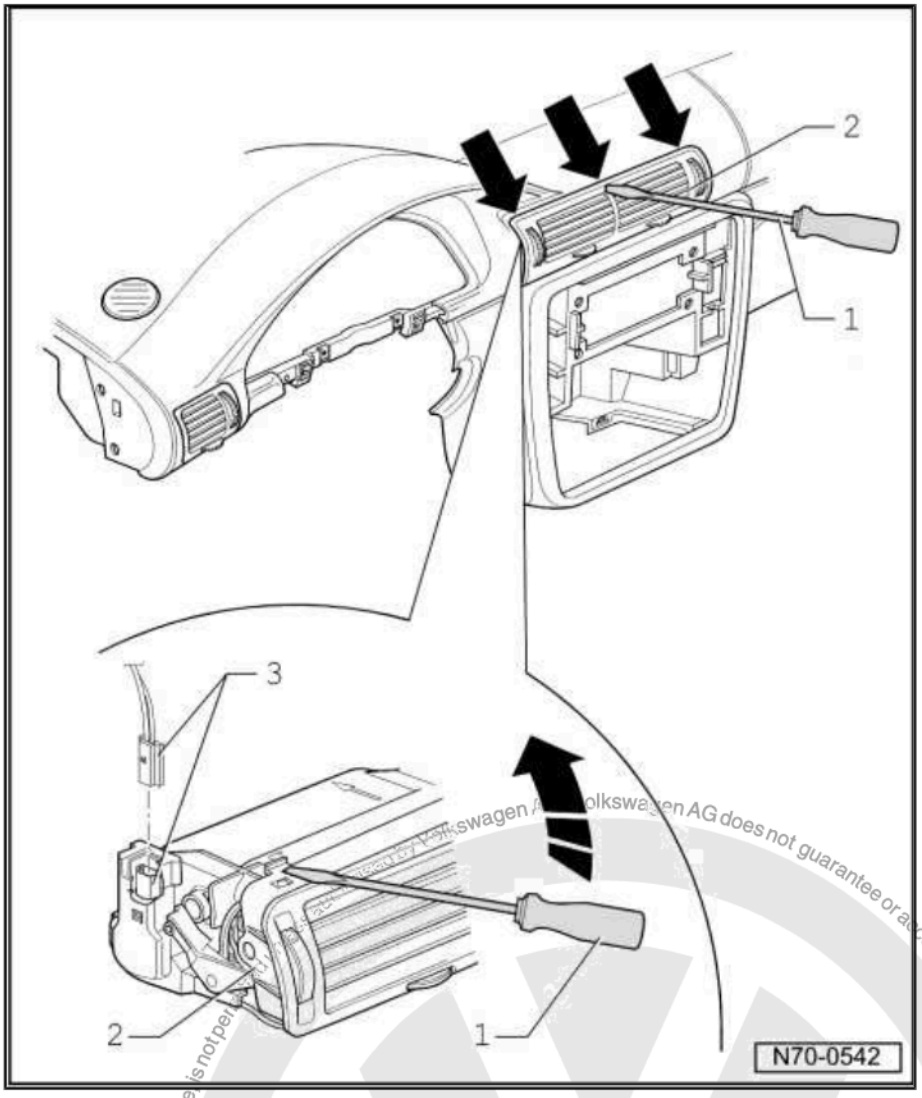

– Release the three clips -arrows- with a flat-head screwdriver -1-.

Note

The retainers are located in the upper transition area between vent and instrument panel.

– Hold vent -2- with tension to prevent already released clips from engaging.
– Remove vent -2- from instrument panel and disconnect connector -3-.

Protected by copyright. Copying for private or commercial purposes, in part or in whole, is not permitted unless authorised by Volkswagen AG. Volkswagen AG does not guarantee or accept any liability with respect to the correctness of information in this document. Copyright by Volkswagen AG.

– Remove bolt -arrow-.
– Remove trim -1-.

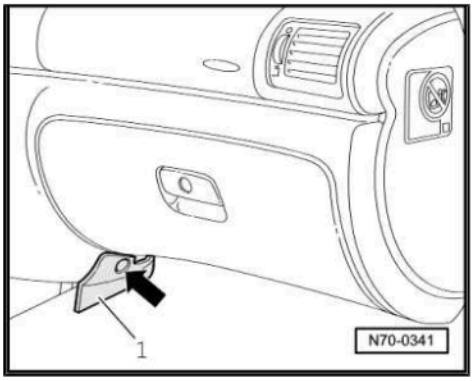

– Pry off cap -1-.
– Remove bolts -2- and -3-.
– Unclip lower A-pillar trim on passenger side -4- from sill panel and remove.

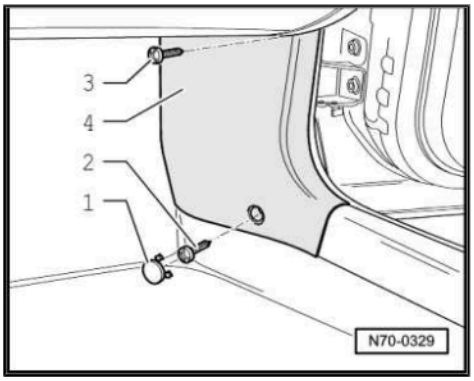

– Remove the bolts -arrows-.
– Open storage compartment on passenger side -1-.

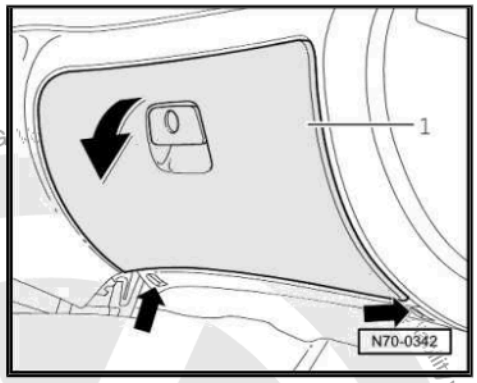

– Carefully unclip light at top from locking mechanism using screwdriver.

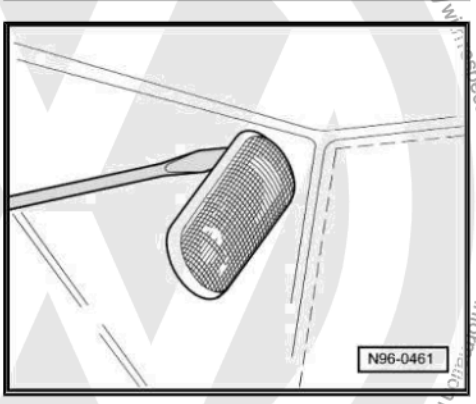

Note

Be careful not to damage glove compartment lamp switch when removing lamp.

– Carefully remove diffusion lens with lamp holder.
– Replace 12V/3W lamp if necessary.

Note

- *Note installation position of glove compartment lamp when installing. Storage compartment switch must point downward!*
- *For the sake of illustration, glove compartment is depicted as removed.*

Protected by copyright. Copying for private or commercial purposes, in part or in whole, is not permitted unless authorised by Volkswagen AG. Copyright by Volkswagen AG.

– Install diffusion lens with mounting plate into storage compartment and engage.

After repair work of glove compartment lamp, a function test of switch must be performed. Lamp must not light up with cover closed!

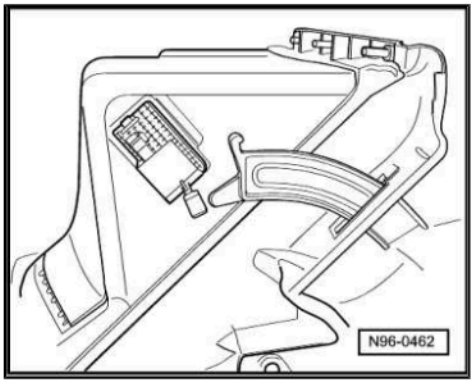

– Remove the bolts -arrows-.
– Disconnect harness connector -2- from lamp -1-.

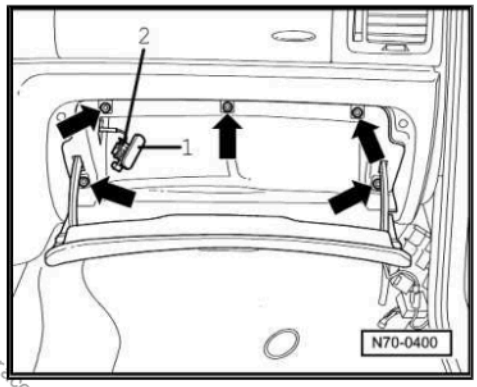

– Pull storage compartment on passenger side -1- out of instrument panel -arrow-.

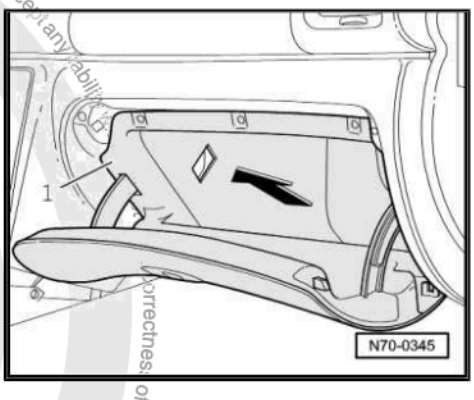

– Pry off cover -1-.

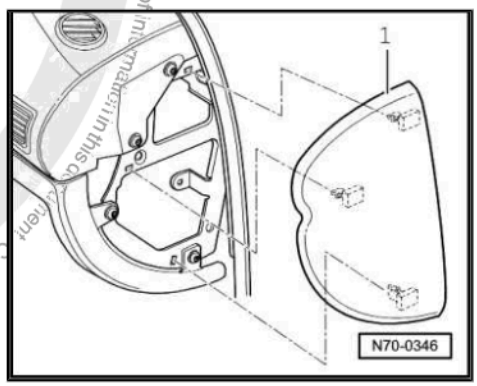

Protected by copyright. Copying for private or commercial purposes, in part or in whole, is not permitted unless authorised by Volkswagen AG. Volkswagen AG does not guarantee or accept any liability with respect to the correctness of information in this document. Copyright by Volkswagen AG.

– Remove hex head bolts -arrows-.
– Disconnect harness connector -1-.
– Lift out instrument panel.

Installing

To install, perform the steps used for removal in reverse order.

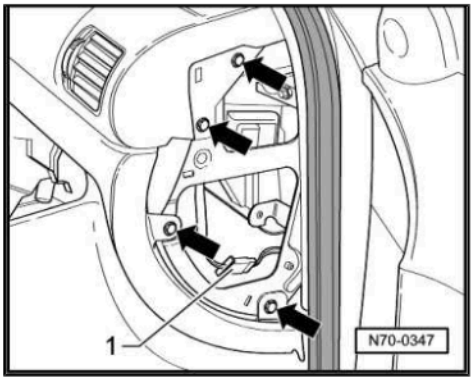

2.2 Door Trim

⇒ "2.2.1 Driver Side Front Door Trim", page 107
⇒ "2.2.2 Passenger Side Front Door Trim", page 109
⇒ "2.2.3 Rear Door Trim", page 110

2.2.1 Driver Side Front Door Trim

Special tools and workshop equipment required

♦ Door Trim Pliers - 3392-

Removing

– Switch off ignition.

Note

♦ *Since the partition is very narrow, use a sharp screwdriver to prevent damage to panel and grip recess.*
♦ *Do not grasp in grip depression when pulling off grip recess as a strut secured to door trim is underneath.*

– Insert small screwdriver in lower partition between panel -1- and grip recess -2-
– Unclip grip recess -2- upward out of door trim.

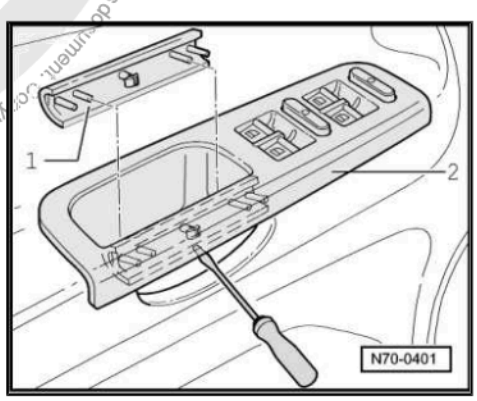

– Pull locking mechanism -1- in direction of -arrow- and remove connector -2-.

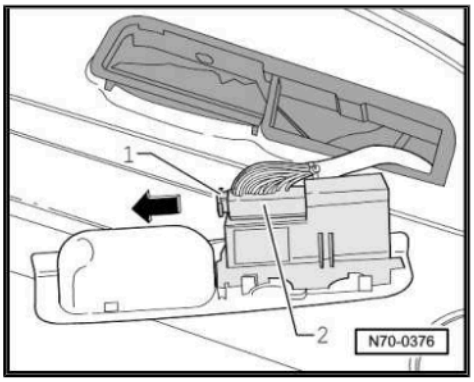

Protected by copyright. Copyright by Volkswagen AG. Volkswagen AG does not guarantee or accept any liability with respect to the correctness of information in this document. Copyright by Volkswagen AG. Reproduction and publication in whole or in part is not permitted unless authorised by Volkswagen AG.

– Remove three screws.

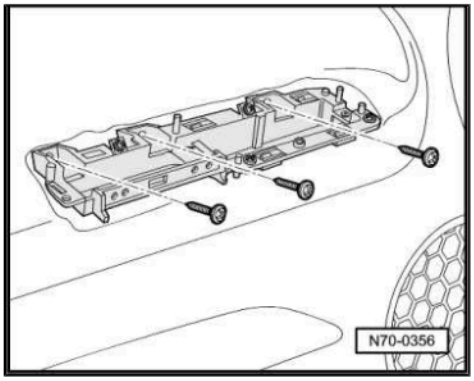

– Remove the bolts -arrows-.

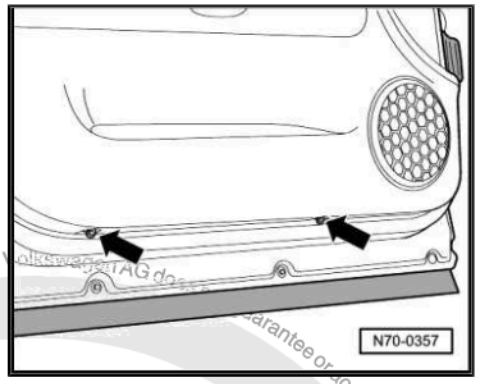

– Unclip door trim -1- at the sides using disassembly pliers -3392- .
– Lift door trim upward out of window recess.

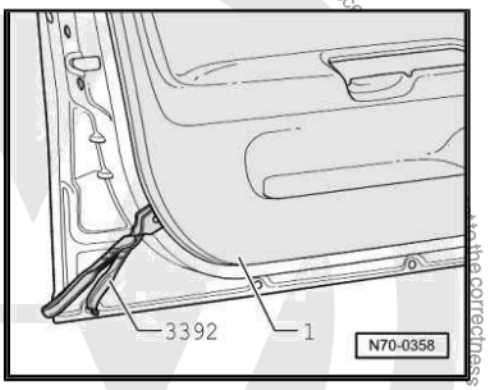

– Pull cable -1- in direction of -arrow- out of guide -2- and disengage.
– Disconnect connectors -3- and -4-.

Installing

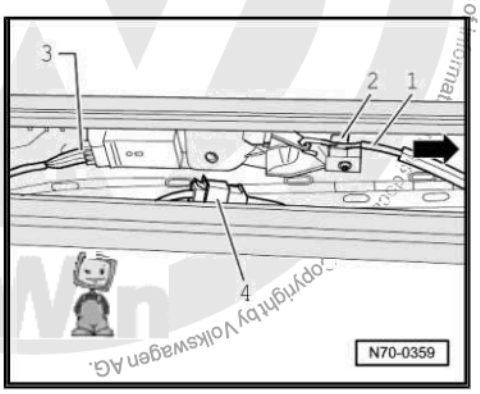

Protected by copyright. Copying for private or commercial purposes, in part or in whole, is not permitted unless authorised by Volkswagen AG. Volkswagen AG does not guarantee or accept any liability with respect to the correctness of information. Copyright by Volkswagen AG.

– Pull off window recess seal -1- from door trim and insert in window recess.

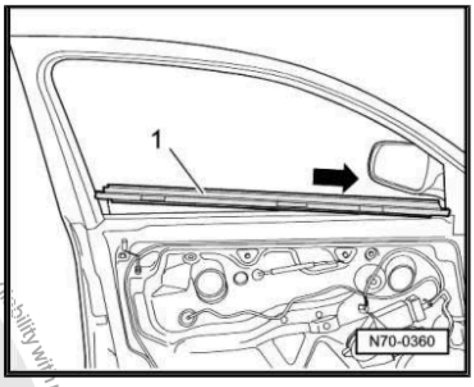

Note

Replace clips before installing door trim.

2.2.2 Passenger Side Front Door Trim

Special tools and workshop equipment required

♦ Door Trim Pliers - 3392-

Removing

– Switch off ignition.

Note

To avoid damage to door trim, place plastic spatula -2- or something similar between screwdriver and door trim.

– Guide screwdriver (max. 5 mm wide) into opening on bottom side of inside door handle -arrow-, rotate and pry out trim -1-.

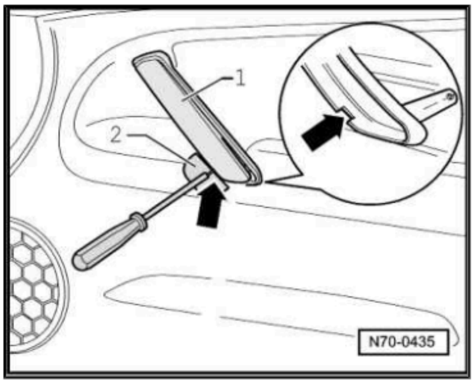

– Remove the screws -1- and -2-.

Note

The inside door handle -3- is attached to the door trim and can only be removed with door trim removed.

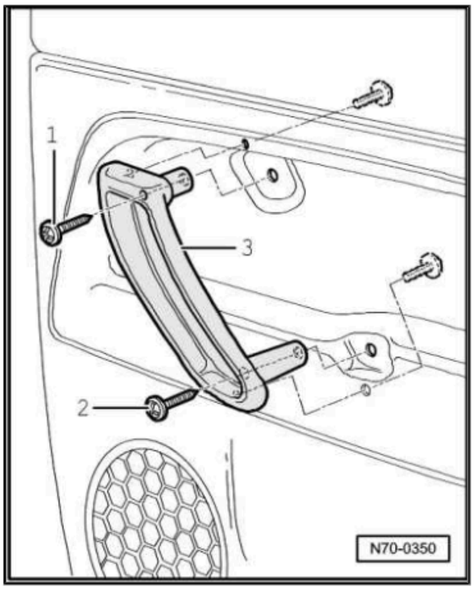

Protected by copyright. Copying for private or commercial purposes, in part or in whole, is not permitted unless authorised by Volkswagen AG. Volkswagen AG does not guarantee or accept any liability with respect to the correctness of information in this document. Copyright by Volkswagen AG.

– Remove the bolts -arrows-.

– Unclip door trim -1- at the sides using disassembly pliers - 3392- .

– Lift door trim upward out of window recess.

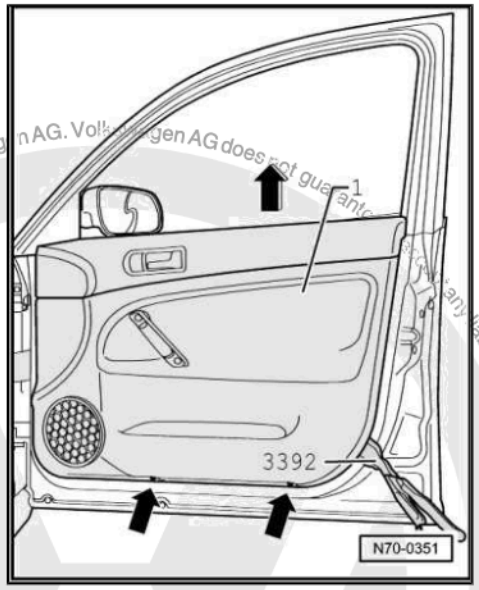

– Pull cable -1- in direction of -arrow- out of guide -2- and disengage.

– Disconnect harness connector -3-.

Installing

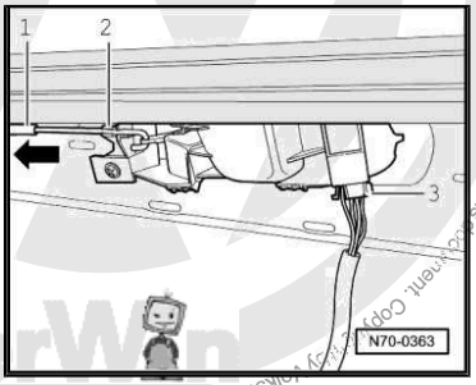

– Pull off window recess seal -1- from door trim and insert in window recess.

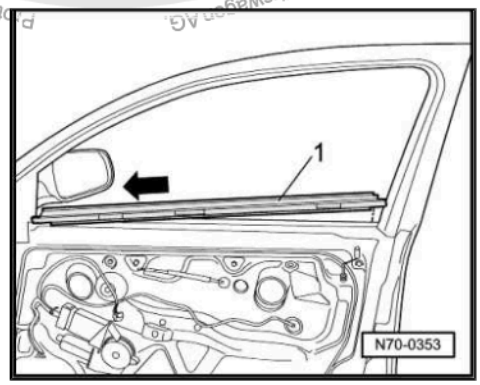

Note

Replace clips before installing door trim.

2.2.3 Rear Door Trim

Special tools and workshop equipment required

♦ Door Trim Pliers - 3392-

Removing

– Switch off ignition.

Protected by copyright. Copying for private or commercial purposes, in part or in whole, is not permitted unless authorised by Volkswagen AG. Volkswagen AG does not guarantee or accept any liability with respect to the correctness of information in this document. Copyright by Volkswagen AG.

Note

To avoid damage to door trim, place plastic spatula -2- or something similar between screwdriver and door trim.

– Guide screwdriver (max. 5 mm wide) into opening on bottom side of inside door handle -arrow-, rotate and pry out trim -1-.

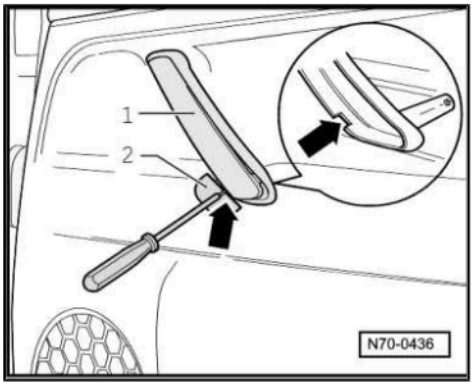

– Remove the screws -1- and -2-.

Note

The inside door handle -3- is attached to the door trim and can only be removed with door trim removed.

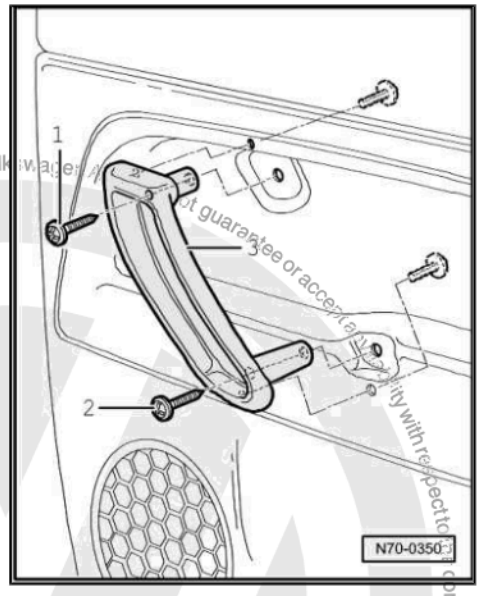

– Remove the bolt -1-.
– Unclip door trim at the sides using disassembly pliers - 3392- .
– Lift door trim upward out of window recess.

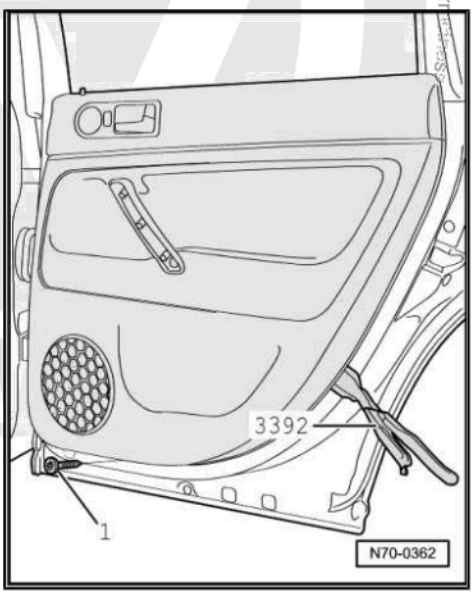

Protected by copyright. Copying for private or commercial purposes, in part or in whole, is not permitted unless authorised by Volkswagen AG. Volkswagen AG does not guarantee or accept any liability with respect to correctness

– Pull cable -1- in direction of -arrow- out of guide -2- and disengage.

– Disconnect harness connector -3-.

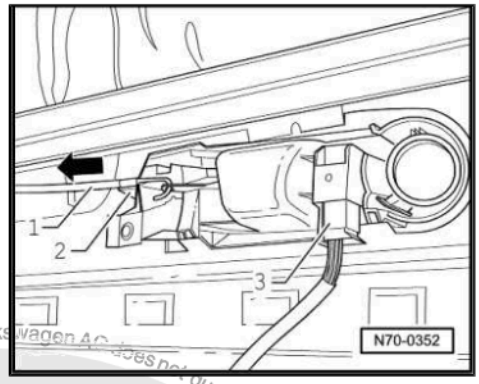

Installing

– Pull off window recess seal -1- from door trim and insert in window recess.

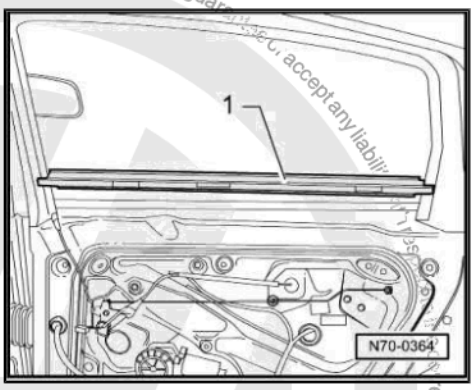

Note

Replace clips before installing door trim.

2.3 Pillar and Side Trim

⇒ “2.3.1 Upper A-Pillar Trim”, page 112
⇒ “2.3.2 Lower A-Pillar Trim”, page 114
⇒ “2.3.3 Upper B-Pillar Trim”, page 115
⇒ “2.3.4 Lower B-Pillar Trim”, page 119
⇒ “2.3.5 Upper C/D-Pillar Trim, Sedan”, page 120
⇒ “2.3.6 Upper C-pillar Trim, Wagon”, page 123
⇒ “2.3.7 Lower C-pillar Trim”, page 126
⇒ “2.3.8 Upper D-Pillar Trim, Wagon”, page 127
⇒ “2.3.9 Rear Shelf”, page 129

2.3.1 Upper A-Pillar Trim

Vehicles without side curtain airbag

Protected by copyright. Copying for private or commercial purposes, in part or in whole, is not permitted unless authorised by Volkswagen AG. Volkswagen AG does not guarantee or accept any liability with respect to the correctness of information in this document. Copyright by Volkswagen AG.

1 - Trim

- ❑ Removing:
- ❑ Remove seal --item 4- ⇒ Item 4 (page 113) - in A-pillar trim area.
- ❑ Unclip trim, beginning at top.
- ❑ Remove trim upward.
- ❑ Installing:
- ❑ Check clips --item 3- ⇒ Item 3 (page 113) -, replace if necessary and insert in trim mounts.
- ❑ Clip trim securely and seat seal --item 4- ⇒ Item 4 (page 113) - properly.

2 - Sleeve

- ❑ Clip mount --item 3- ⇒ Item 3 (page 113) -
- ❑ Qty. 4

3 - Clip

- ❑ Qty. 4

4 - Seal

- ❑ After assembling trim, make sure seal is properly fitted.

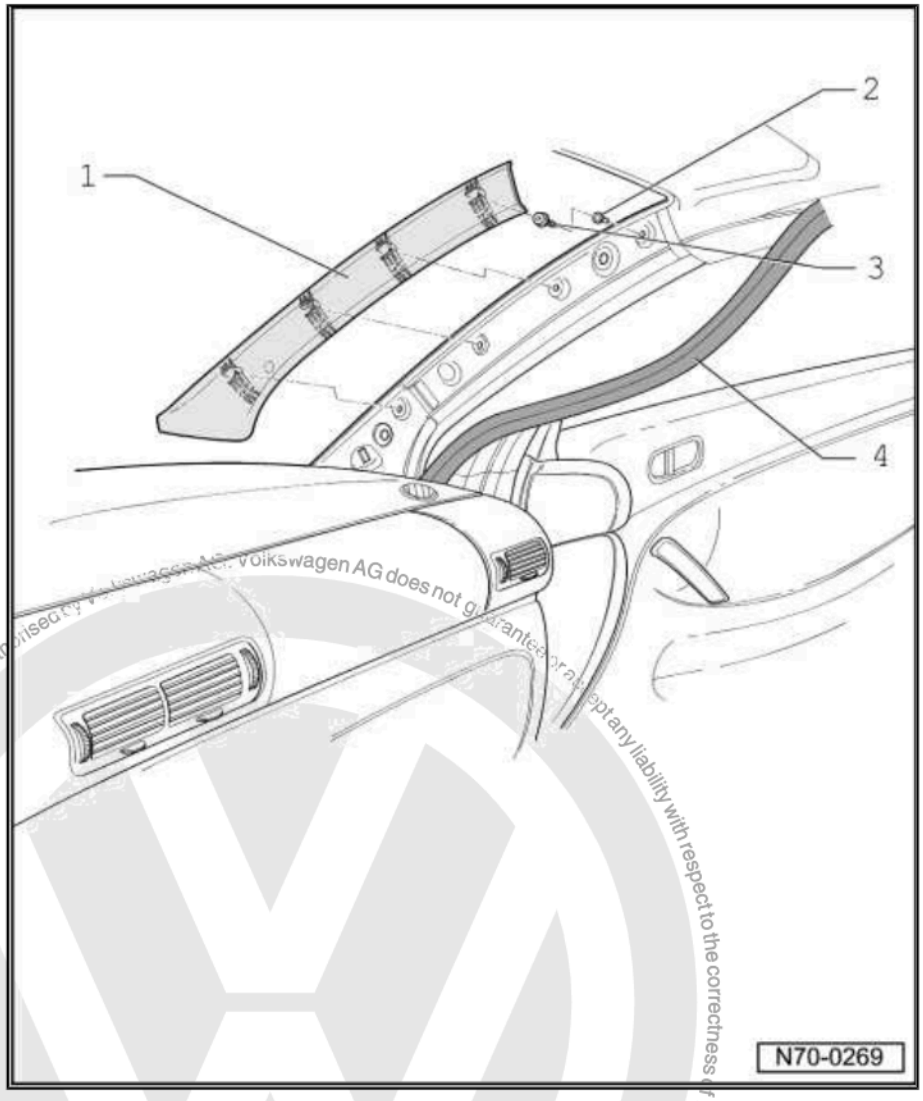

Vehicles with side curtain airbag

Note

Upper A-pillar trim cannot be removed without damaging, it must be replaced after removal.

Protected by copyright. Copyright by Volkswagen AG. Volkswagen AG does not guarantee or accept any liability with respect to the correctness of information in this document. Copying for private or commercial purposes, in part or in whole, is not permitted unless authorised by Volkswagen AG.

1 - Seal

2 - Trim

- ❑ Removing:
- ❑ Remove seal --item 1- ⇒ Item 1 (page 114) - in A-pillar trim area.
- ❑ Unclip trim, beginning at top.
- ❑ Remove trim upward.
- ❑ If the clips --item 3- ⇒ Item 3 (page 114) - remain in the body when unclipping the trim, they must be pressed together with needle-nose pliers to prevent damage. Now carefully remove clips from body with pliers.
- ❑ Installing:
- ❑ Insert trim at instrument panel height, clip securely and seat seal -1- correctly.

3 - Clips

- ❑ Destroyed when removed.

4 - Limiting Strap

5 - A-Pillar

6 - Sleeve

- ❑ Clip mount -7-
- ❑ Quantity: 3

7 - Clip

- ❑ Quantity: 3

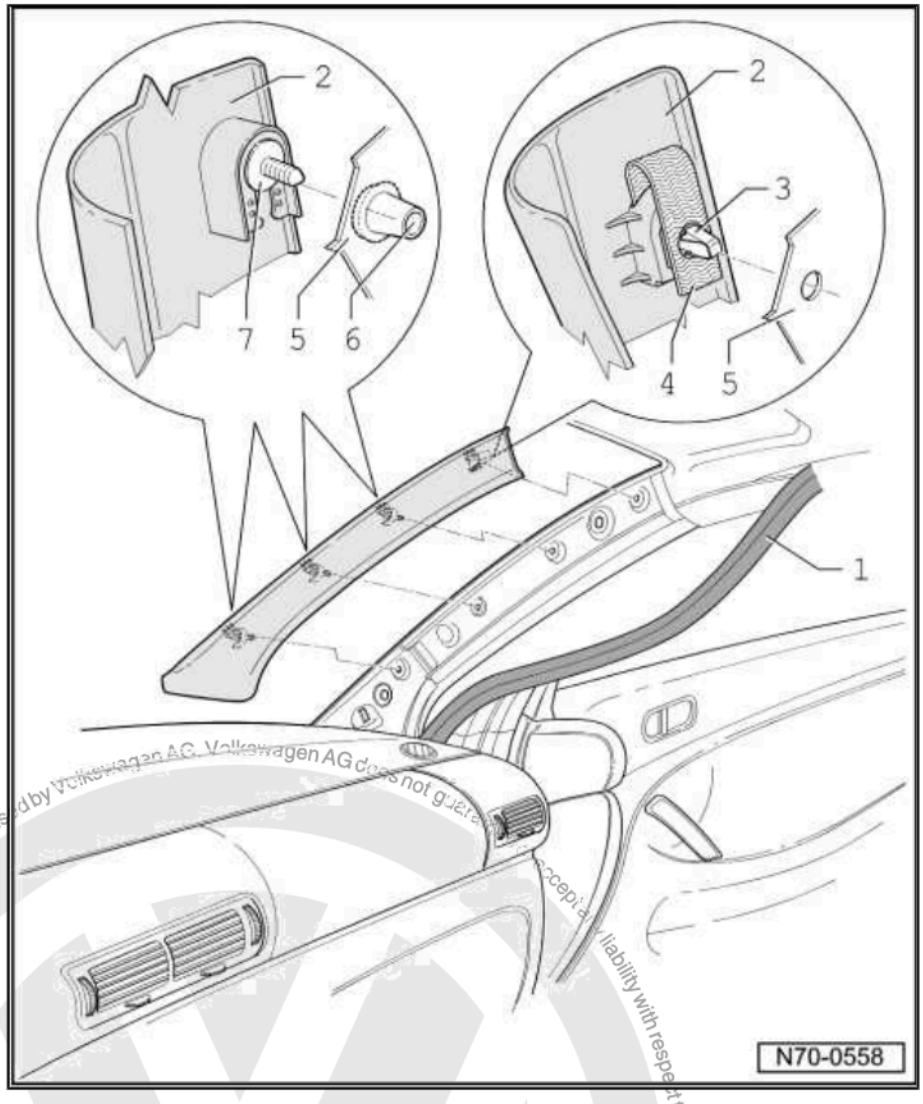

2.3.2 Lower A-Pillar Trim

Driver Side

– Pry off cap -1-.

– Remove bolts -2- and -3-.

– Unclip trim -4- from sill panel strip and remove.

Passenger Side

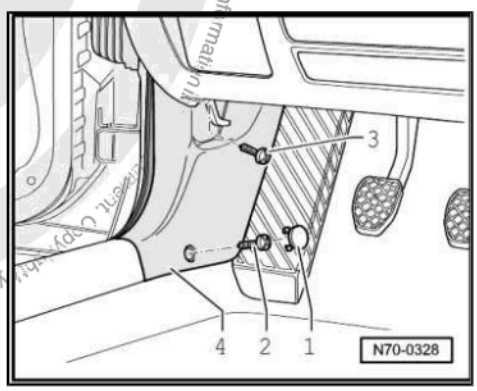

Protected by copyright. Copying for private or commercial purposes, in part or in whole, is not permitted unless authorised by Volkswagen AG. Volkswagen AG does not guarantee or accept any liability with respect to the correctness of information in this document. Copyright by Volkswagen AG.

– Pry off cap -1-.
– Remove bolts -2- and -3-.
– Unclip trim -4- from sill panel strip and remove.

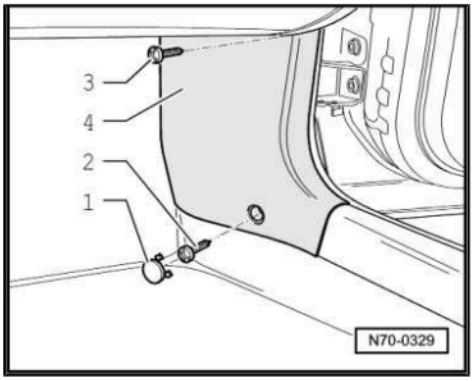

2.3.3 Upper B-Pillar Trim

Vehicles without side curtain airbag

Removing

Note

The illustrations cover only one side of vehicle, the other side of vehicle is similar.

– Pry off cap -1-.
– Remove bolts -2- and -3-.
– Unclip trim -4- from sill panel strip and remove.

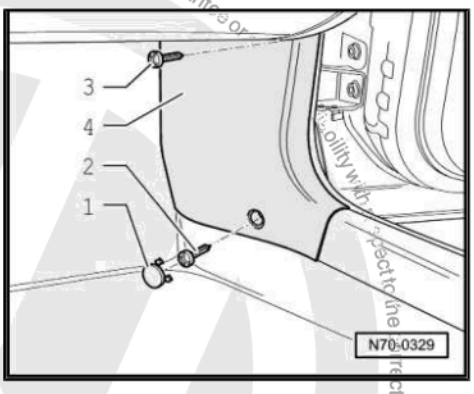

– Unclip sill panel strip -1- from front to behind B-pillar.
– Remove hex head bold (40 Nm) -2-.
– Remove belt anchor -3-.

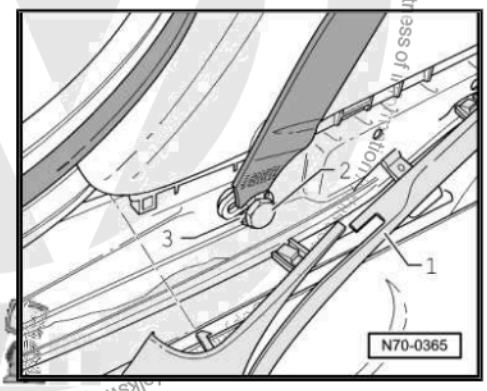

Protected by copyright. Copying for private or commercial purposes, in part or in whole, is not permitted unless authorised by Volkswagen AG. Volkswagen AG does not guarantee or assume any liability with respect to the correctness of information.

– Unclip trim -1- from B-pillar, first on sides and then in upper area.

– Remove seat belt -2- from trim.

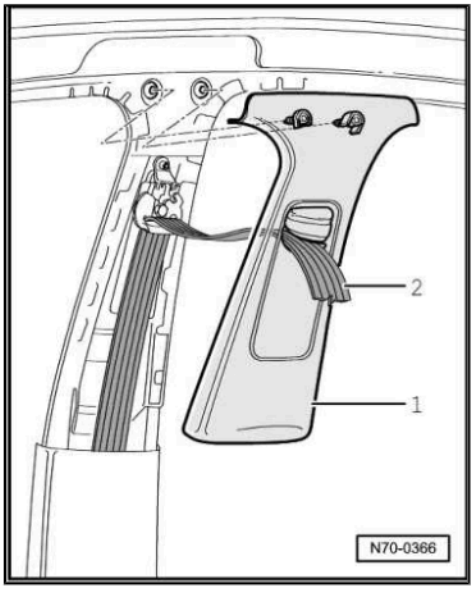

Installing

– Check clips -1-, replace if necessary and insert in trim mounts -2-.

– Pull seat belt with locking tongue and belt anchor through trim.

– Bring trim into installation position and clip onto B-pillar, ensuring belt height adjuster is seated correctly.

– Attach belt anchor to sill (40 Nm).

– Clip in sill panel strip.

– Install lower A-pillar trim.

– Seat door seals correctly.

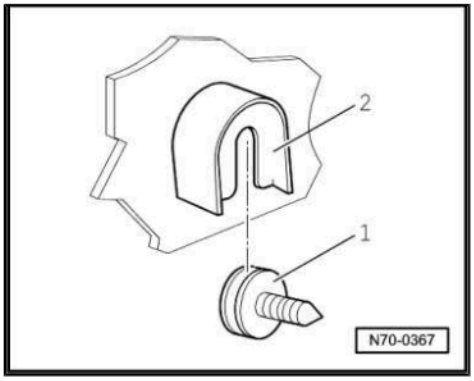

Vehicles with Side Curtain Airbag

Note

Upper B-pillar trim cannot be removed without damaging, it must be replaced after removal.

Protected by copyright. Copying for private or commercial purposes, in part or in whole, is not permitted unless authorised by Volkswagen AG. Volkswagen AG does not guarantee or accept any liability with respect to the correctness of information in this document. Copyright by Volkswagen AG.

1 - Trim

2 - Seat Belt

3 - Clamps

❑ Is destroyed during removal.

4 - Limiting Strap

5 - B-Pillar

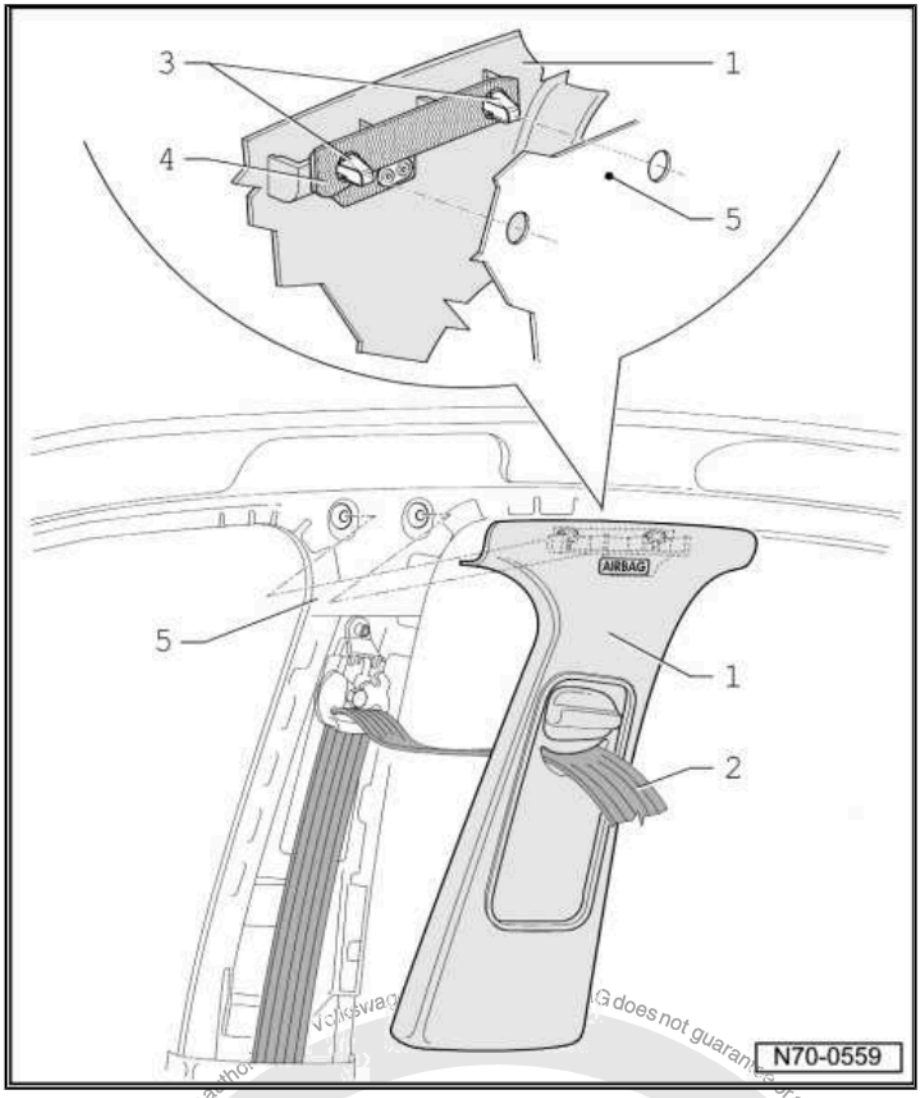

Removing

Note

The illustrations cover only one side of vehicle, the other side of vehicle is similar.

– Pry off cap -1-.

– Remove bolts -2- and -3-.

– Unclip trim -4- from sill panel strip and remove.

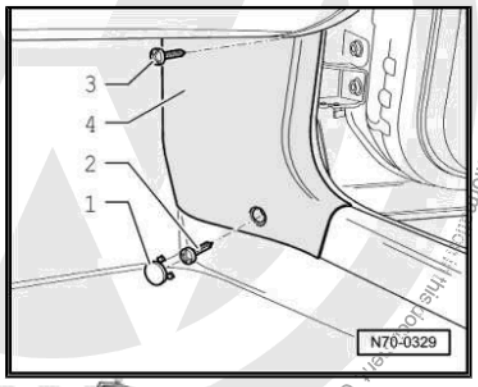

Protected by copyright. Copying for private or commercial purposes, in part or in whole, is not permitted unless authorised. Copyright by Volkswagen AG. Volkswagen AG does not guarantee or accept any liability with respect to the correctness of information in this document.

– Unclip sill panel strip -1- from front to behind B-pillar.
– Remove hex head bold (40 Nm) -2-.
– Remove belt anchor -3-.

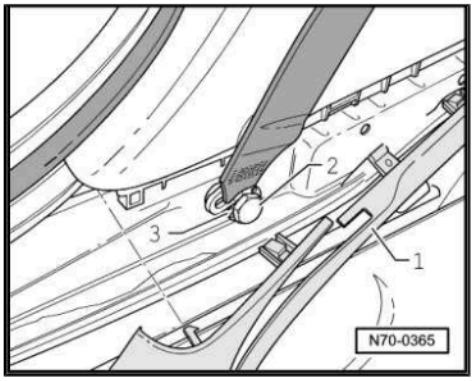

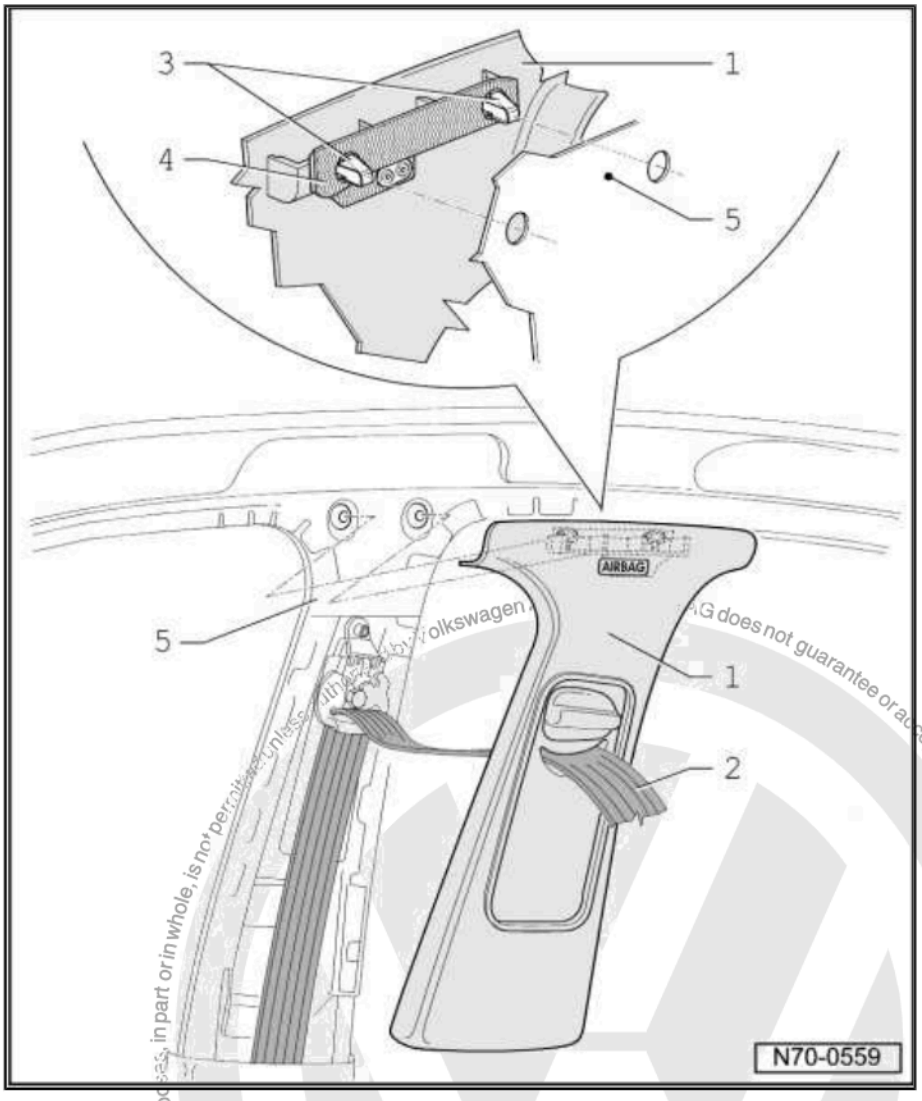

– Unclip trim-1- from B-pillar, first on sides and then in upper area.
– Remove seat belt -2- from trim.
– If the clips remain in the body when unclipping the trim, they must be pressed together with needle-nose pliers to prevent damage. Now carefully remove clip from body with pliers.

Installing

Protected by copyright. Copying for private or commercial purposes, in part or in whole, is not permitted unless authorised by Volkswagen AG. Volkswagen AG does not guarantee or accept any liability with respect to the correctness of information in this document. Copyright by Volkswagen AG.

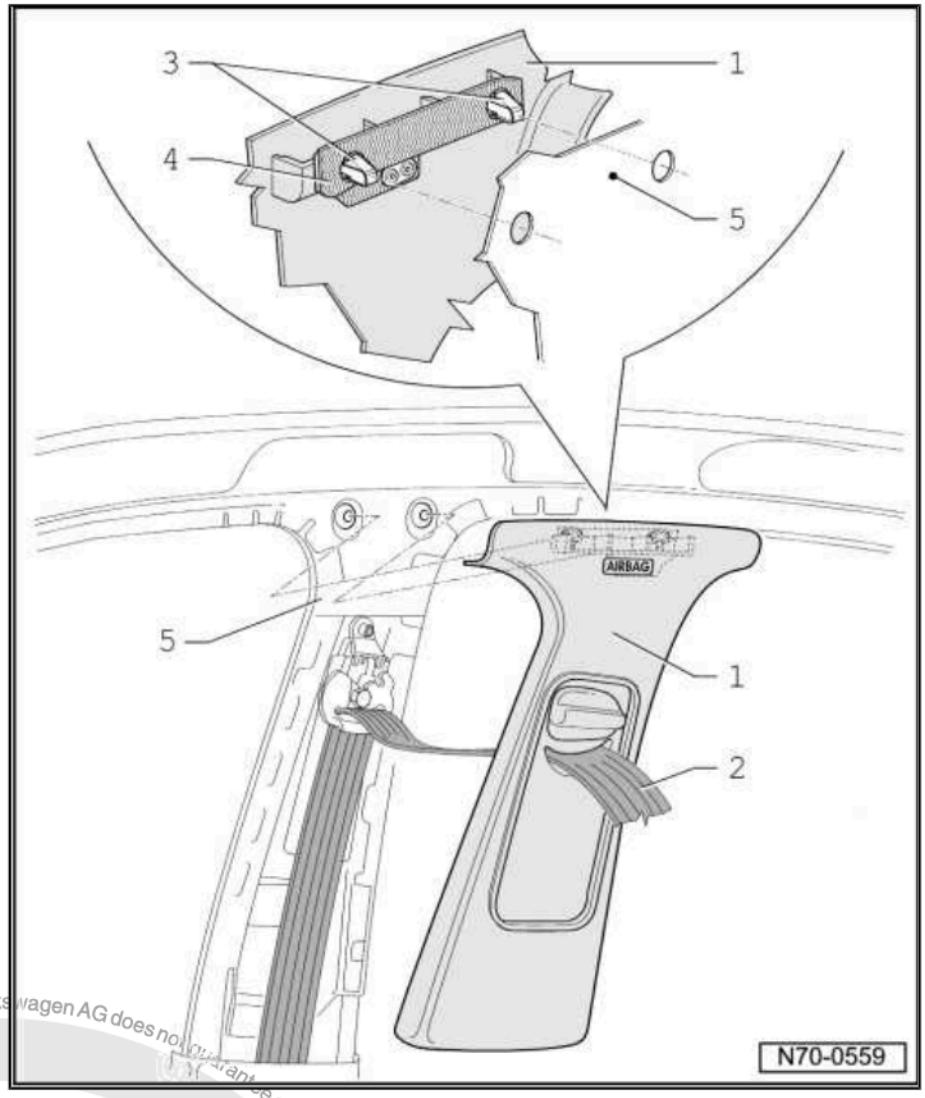

– Pull seat belt with locking tongue and belt anchor -2- through trim -1-.
– Bring trim into installation position and clip onto B-pillar, ensuring belt height adjuster is seated correctly.
– Attach belt anchor -3- to sill with bolt -2- (40 Nm).
– Clip in sill panel strip -1-.
– Install lower A-pillar trim.
– Seat door seals correctly.

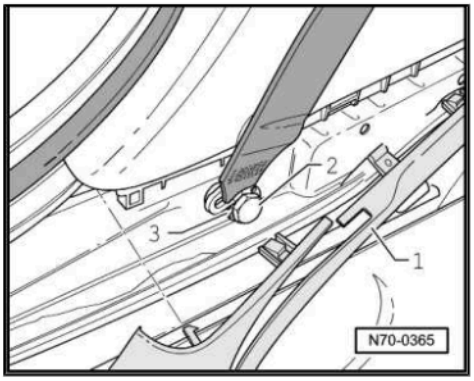

2.3.4 Lower B-Pillar Trim

Removing

– Remove lower A-pillar trim. Refer to ⇒ "2.3.2 Lower A-Pillar Trim", page 114 .

Protected by copyright. Copyright by Volkswagen AG. Copying for private or commercial purposes, in part or in whole, is not permitted unless authorised by Volkswagen AG. Volkswagen AG does not guarantee or accept any liability with respect to the correctness of information in this document.

– Unclip sill panel strip from front to behind B-pillar.

– Remove upper B-pillar trim. Refer to
⇒ “2.3.3 Upper B-Pillar Trim”, page 115 .

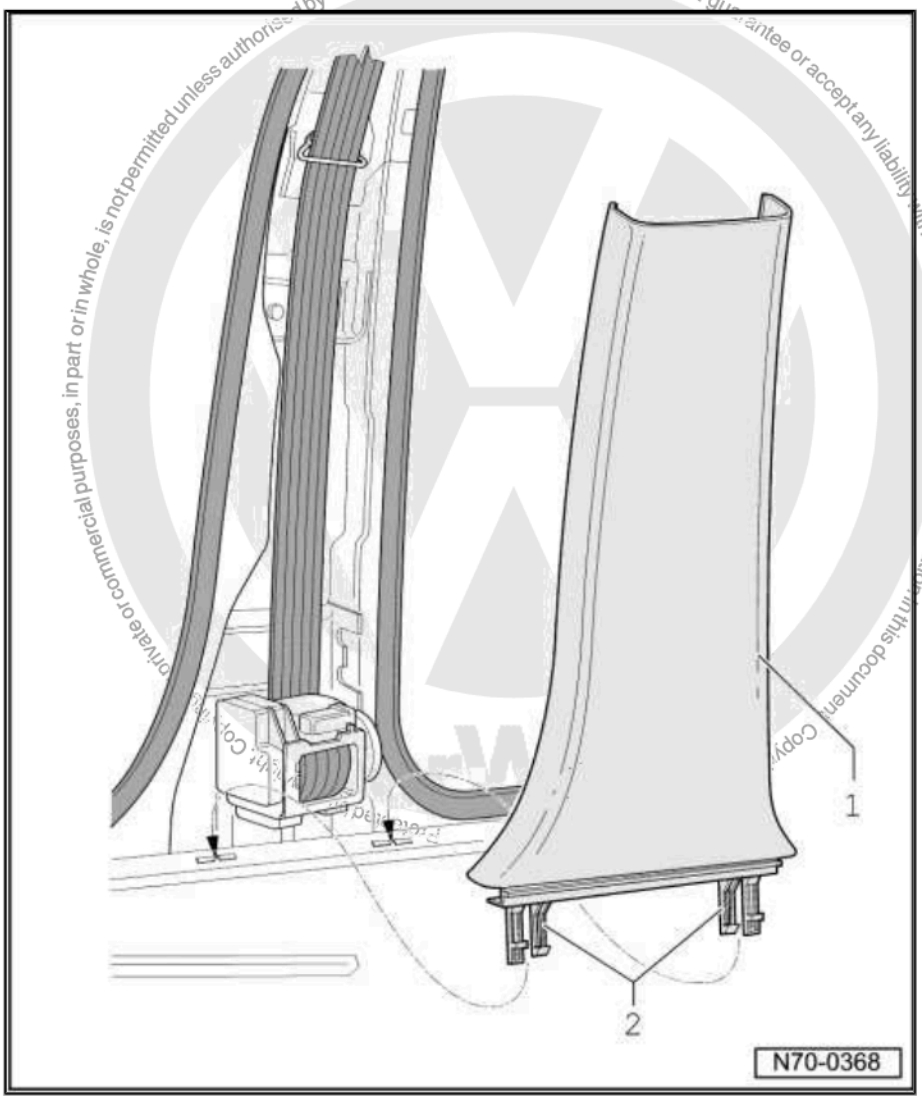

– Unclip trim -1- from B-pillar from top to bottom.

– Press retaining hooks -2- in direction of B-pillar and pull trim upward out of mounts in sill.

Installing

To install, perform the steps used in removal in reverse order.

Note

After installing trim, ensure door seals are seated correctly.

2.3.5 Upper C/D-Pillar Trim, Sedan

Vehicles without Side Curtain Airbag

Protected by copyright. Copying for private or commercial purposes, in part or in whole, is not permitted unless authorised by Volkswagen AG. Volkswagen AG does not guarantee or accept any liability with respect to the correctness of information in this document.

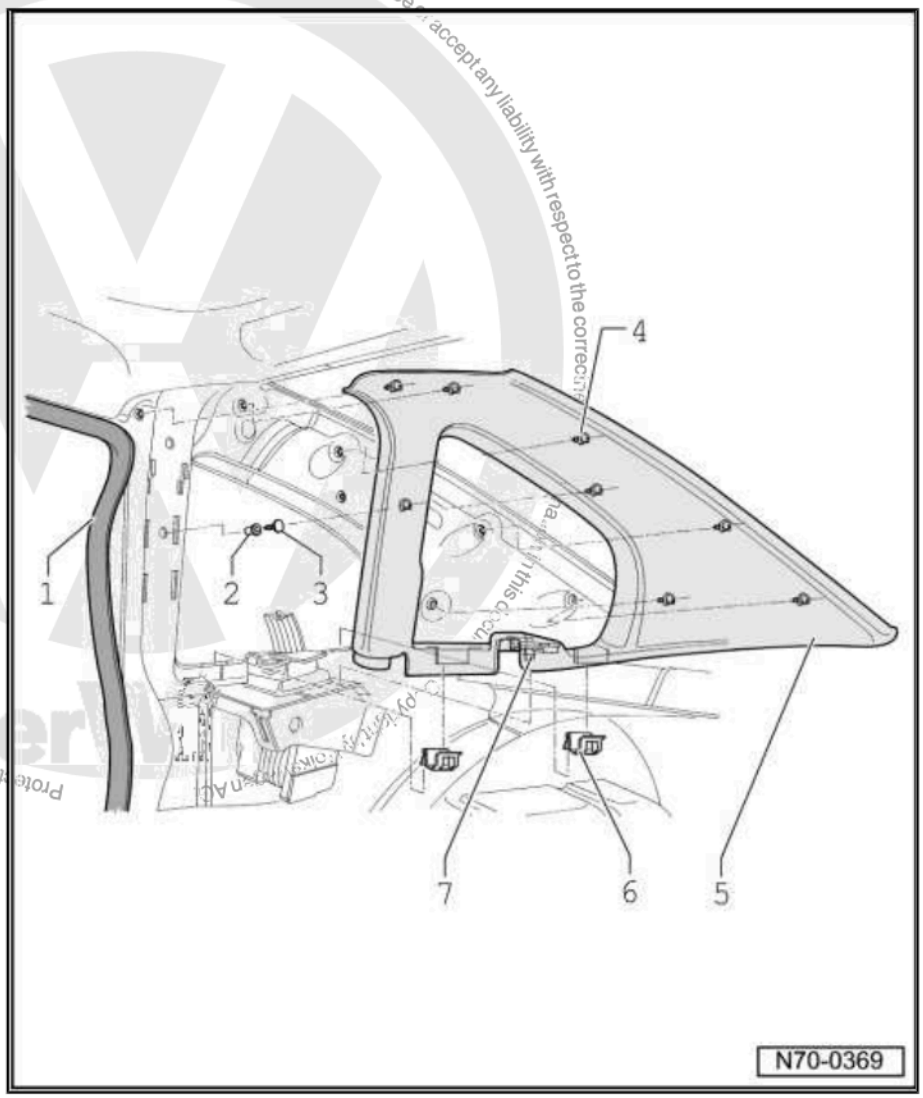

1 - Seal

2 - Sleeve
- ❑ Quantity: 8

3 - Clip
- ❑ Quantity: 8

4 - Mount
- ❑ Component of trim

5 - Trim
- ❑ Removing:
- ❑ Remove seal --item 1- ⇒ Item 1 (page 121) - in trim area from C-pillar.
- ❑ Unclip trim --item 5- ⇒ Item 5 (page 121) - beginning at top.
- ❑ Release backrest and fold forward, remove trim --item 5- ⇒ Item 5 (page 121) - upward from clips --item 6- ⇒ Item 6 (page 121) -.
- ❑ Installing:
- ❑ Check clips --item 3- ⇒ Item 3 (page 121) - and clip --item 7- ⇒ Item 7 (page 121) -, replace if necessary and insert in trim mounts --item 4- ⇒ Item 4 (page 121) -.
- ❑ Check clips --item 6- ⇒ Item 6 (page 121) -, replace if necessary and insert in mounts on window flange.
- ❑ Insert trim in clips --item 6- ⇒ Item 6 (page 121) -, clip securely and seat seal --item 1- ⇒ Item 1 (page 121) - properly.

6 - Clips
- ❑ Quantity: 2

7 - Clip

Vehicles with Side Curtain Airbag

Note

Upper C/D-pillar trim (upper part) cannot be removed without damaging, it must be replaced after removal.

Protected by copyright. Copying for private or commercial purposes, in part or in whole, is not permitted unless authorised by Volkswagen AG. Volkswagen AG does not guarantee or accept any liability with respect to the correctness of information in this document. Copyright by Volkswagen AG.

1 - Trim (Upper Part)

- ❑ Removing:
- ❑ Unclip trim beginning at top.
- ❑ If the clips --item 2- ⇒ Item 2 (page 122) - remain in the body when unclipping the trim, they must be pressed together with needle-nose pliers to prevent damage. Then carefully remove clip from body with pliers.
- ❑ Installing:
- ❑ Position trim on side piece and clip securely.

2 - Clips

- ❑ Quantity: 2

3 - Limiting Strap

4 - Side Panel

5 - Sleeve

- ❑ Clip mount --item 6- ⇒ Item 6 (page 122) -
- ❑ Quantity: 2

6 - Clip

- ❑ Quantity: 2

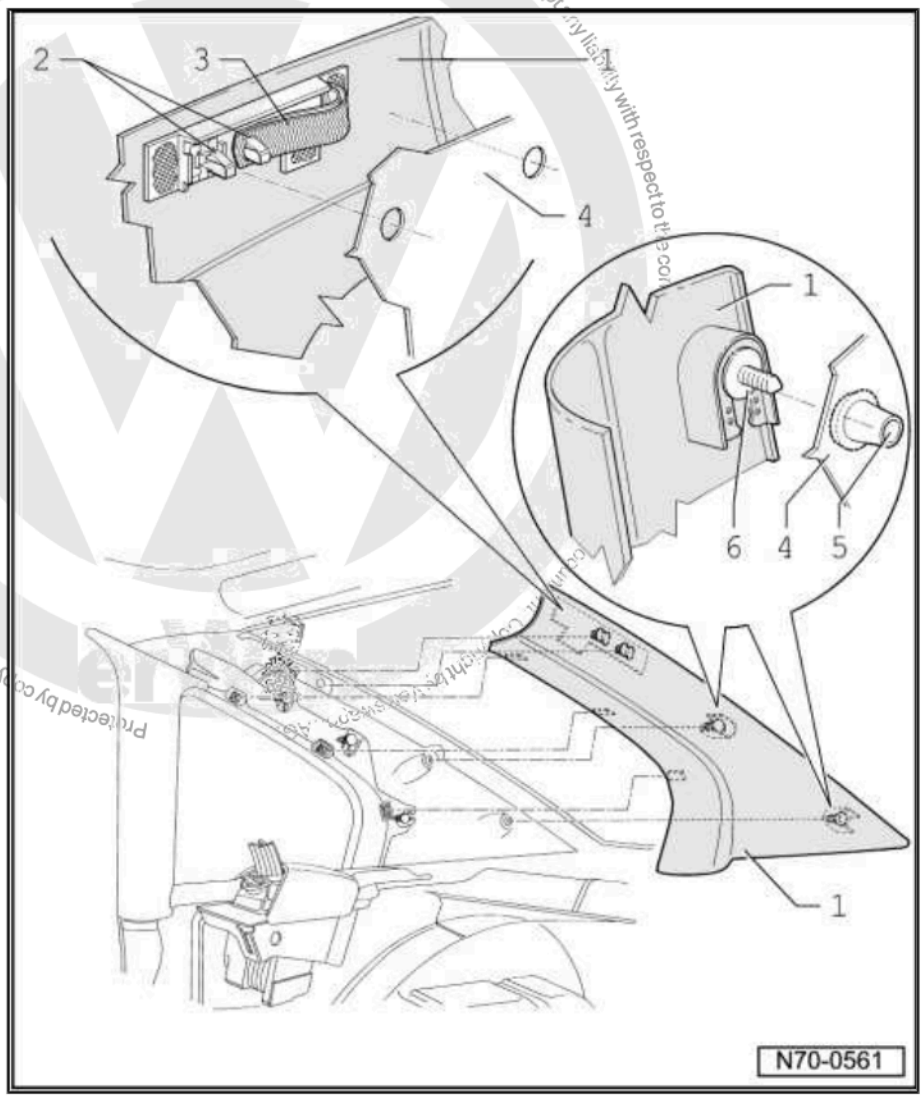

1 - Trim (Lower Part)

- ❑ Removing:
- ❑ Remove door seal in trim area from C-pillar.
- ❑ Unclip trim beginning at top.
- ❑ Release backrest and fold forward, remove trim --item 1- ⇒ Item 1 (page 123) - upward from clips --item 2- ⇒ Item 2 (page 123) -.
- ❑ Installing:
- ❑ Position trim on side piece and clip securely.
- ❑ Insert door seal.

2 - Clips

- ❑ Quantity: 2

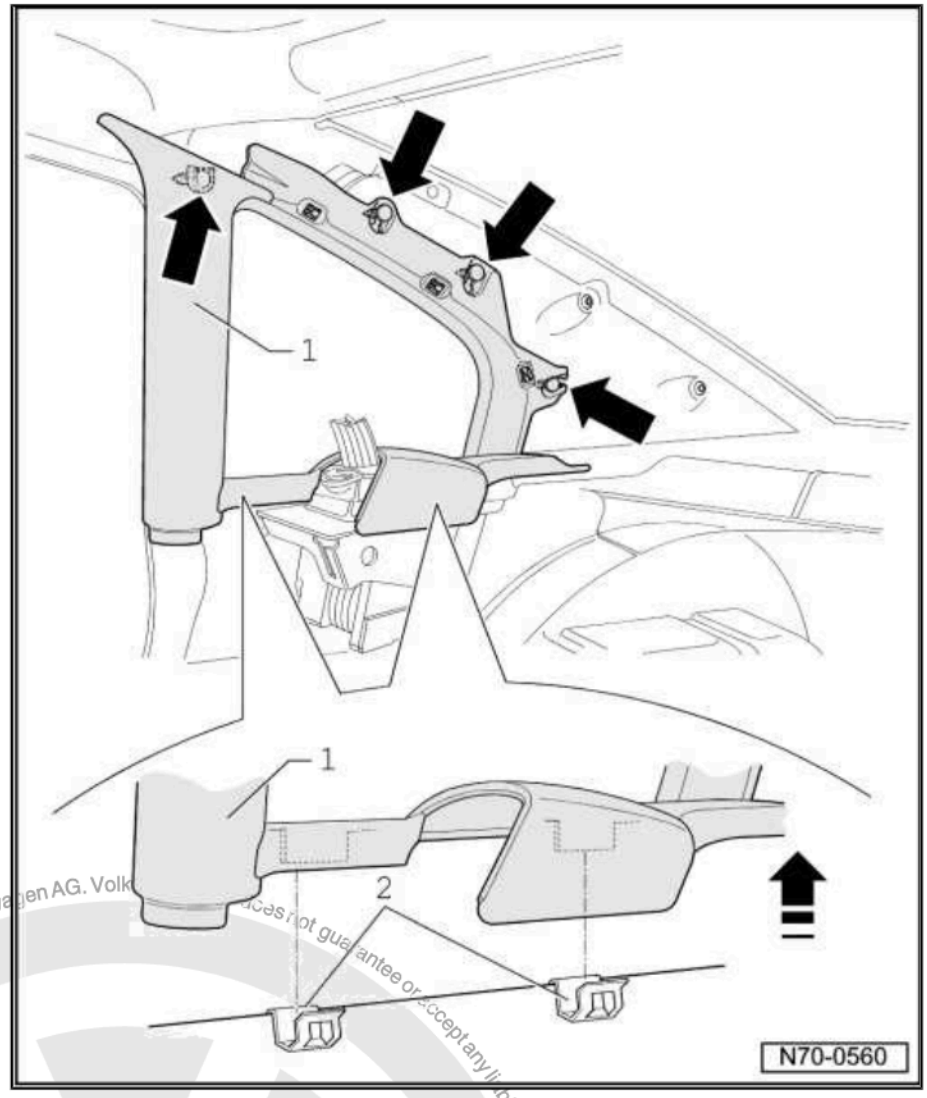

2.3.6 Upper C-pillar Trim, Wagon

Vehicles without side curtain airbag

Removing

Protected by copyright. Copying for private or commercial purposes, in part or in whole, is not permitted unless authorised by Volkswagen AG. Volkswagen AG does not guarantee or accept any liability with respect to the correctness of information in this document. Copyright by Volkswagen AG.

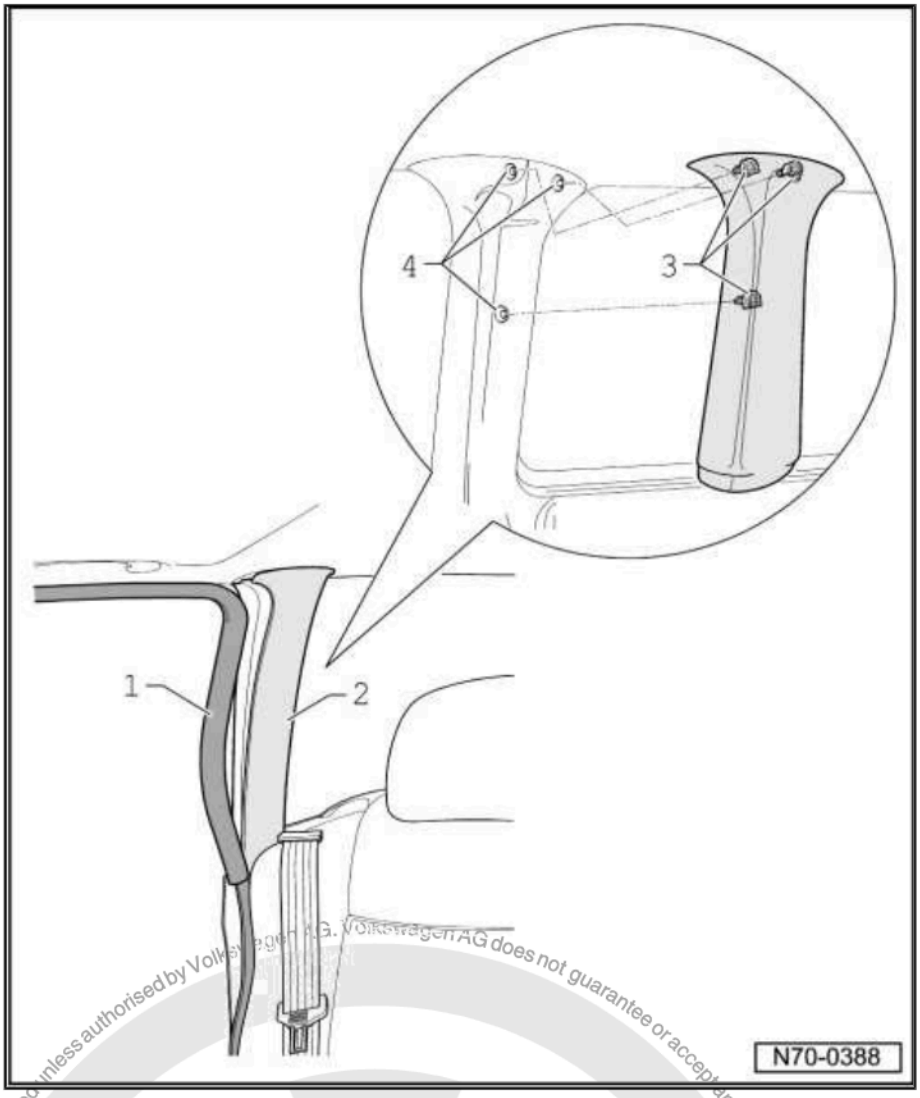

– Remove seal -1- in trim area -2-.
– Pry trim -2- from C-pillar with Pry Lever - 80-200- and remove upward.

Installing

Protected by copyright. Copying for private or commercial purposes, in part or in whole, is not permitted unless authorised by Volkswagen AG. Volkswagen AG does not guarantee or accept any liability with respect to the correctness of information in this document. Copyright by Volkswagen AG.

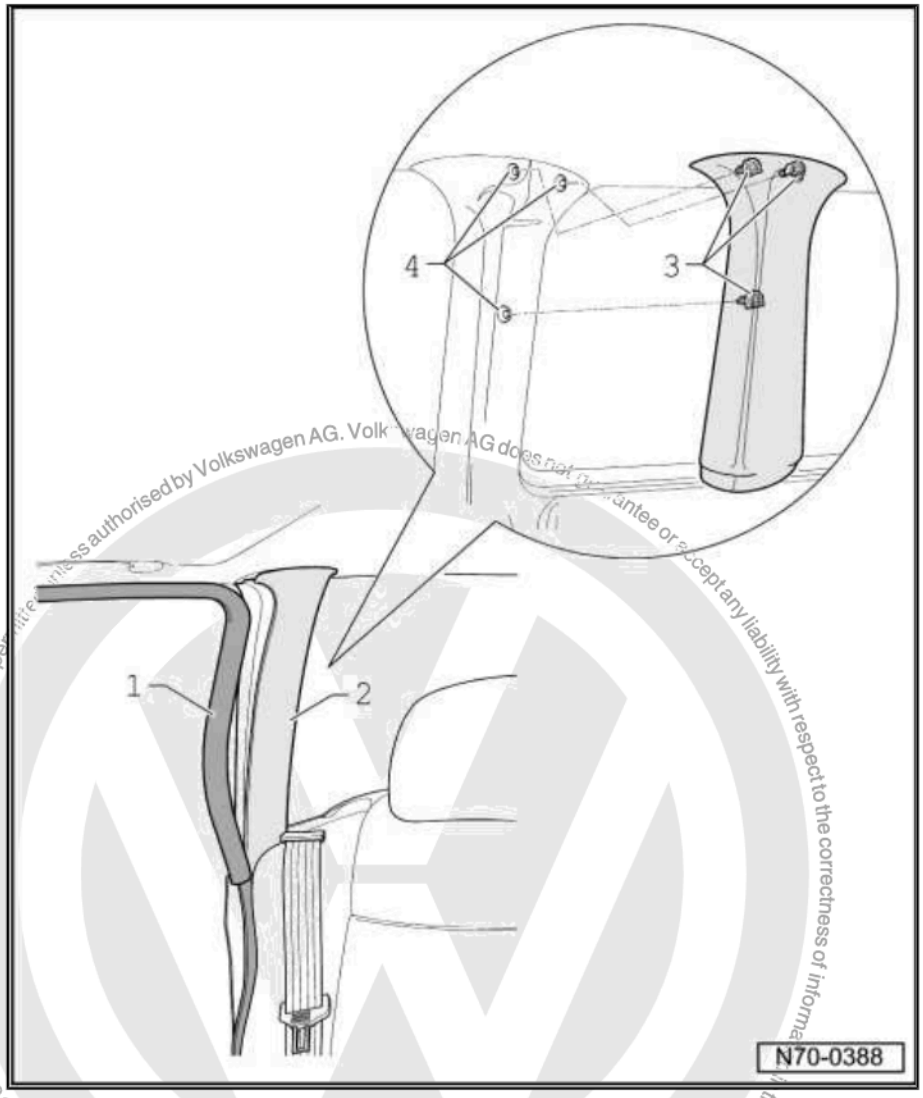

Protected by copyright. Copying for private or commercial purposes, in part or in whole, is not permitted unless authorised by Volkswagen AG. Volkswagen AG does not guarantee or accept any liability with respect to the correctness of information in this document. Copyright by Volkswagen AG.

Note

Before installing trim -2-, check clips -3- and mounting sleeves -4-, replace if necessary.

- Insert clips -3- into mounts for trim -2- and press sleeves -4- into C-pillar holes.
- Clip trim -2- onto C-pillar.
- Seat seal -1- correctly.

Vehicles with Side Curtain Airbag

Note

Upper C-pillar trim cannot be removed without damaging, it must be replaced after removal.

Protected by copyright. Copying for private or commercial purposes, in part or in whole, is not permitted unless authorised by Volkswagen AG. Volkswagen AG does not guarantee or accept any liability with respect to the correctness of information in this document.

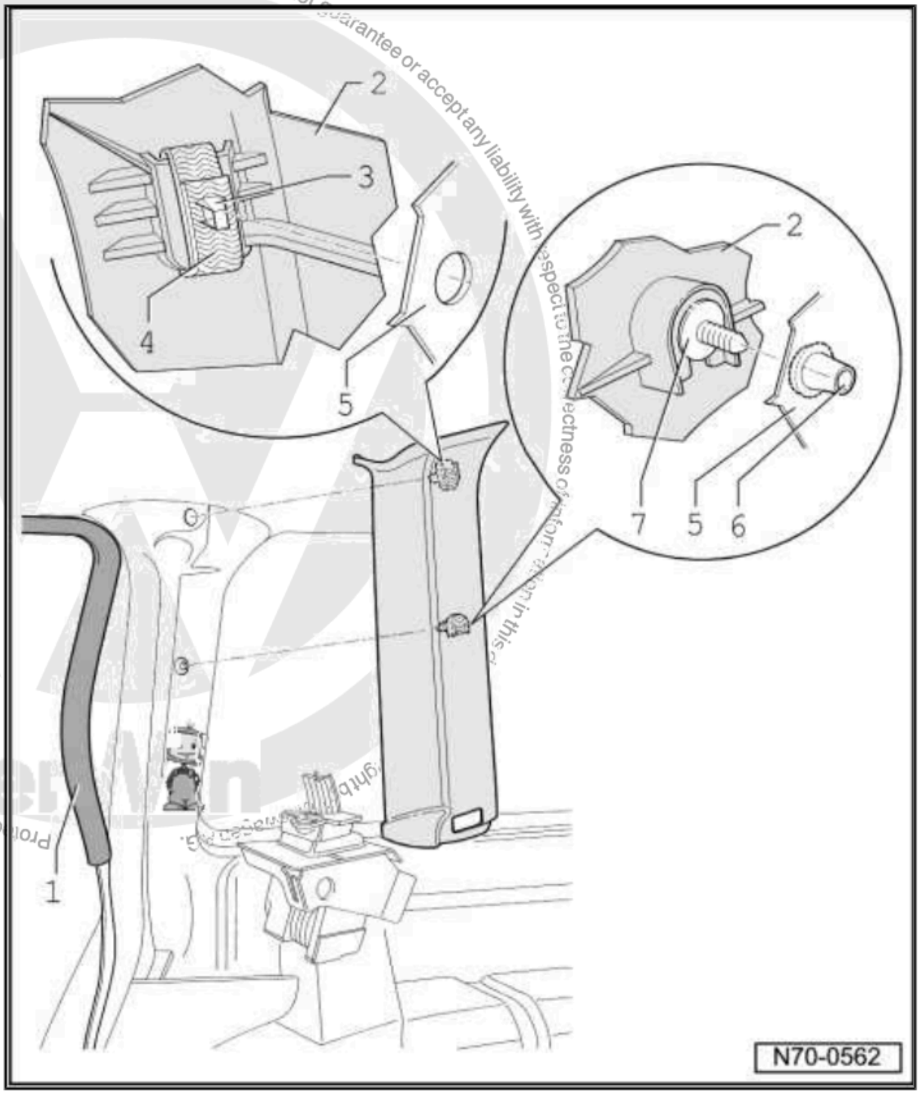

1 - Seal

2 - Trim

- ❑ Removing:
- ❑ Remove seal --item 1- ⇒ Item 1 (page 126) - in C-pillar trim area.
- ❑ Unclip trim --item 2- ⇒ Item 2 (page 126) - with Pry Lever - 80-200- beginning at top.
- ❑ Remove trim upward.
- ❑ If the clips --item 3- ⇒ Item 3 (page 126) - remain in the body when unclipping the trim, they must be pressed together with needle-nose pliers to prevent damage. Then carefully remove clip from body with pliers.
- ❑ Installing:
- ❑ Position trim in installation position and clip into C-pillar.
- ❑ Seat seal --item 1- ⇒ Item 1 (page 126) - correctly.

3 - Clips

- ❑ Destroyed when removed.

4 - Limiting Strap

5 - C-pillar

6 - Sleeve

- ❑ Clip mount --item 7- ⇒ Item 7 (page 126) -

7 - Clip

2.3.7 Lower C-pillar Trim

Removing

Note

The illustrations cover only one side of vehicle, the other side of vehicle is similar.

– Disengage backrest for rear seat bench and push forward.

– Loosen hex nut -2- and remove lock bolt -3-.

– Pull cover -1- in upper area out of clip -4-, press lower tab -6- to rear from sill panel -7- and remove upward with tab -5-.

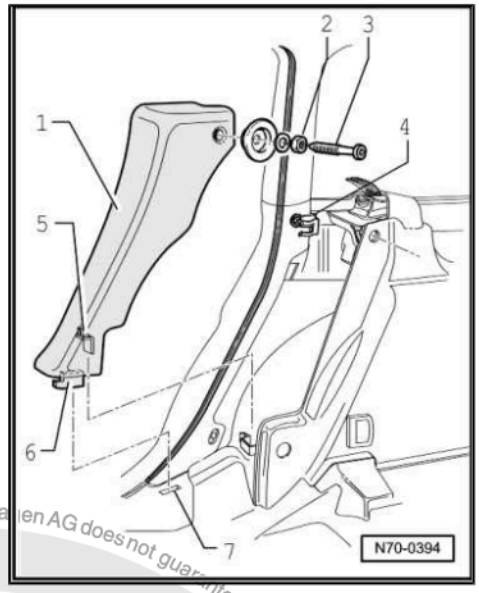

– Remove the bolts -1-.

– Remove trim -2- from clip -3- and from C-pillar.

Installing

To install, perform the steps used in removal in reverse order.

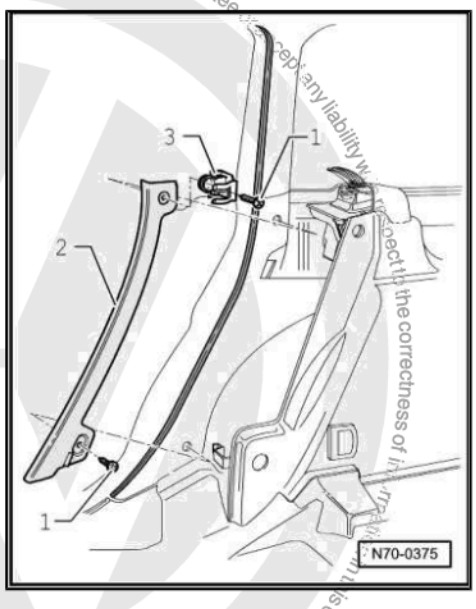

Note

After installing trim, ensure door seal is seated correctly.

2.3.8 Upper D-Pillar Trim, Wagon

Removing

Protected by copyright. Copying for private or commercial purposes, in part or in whole, is not permitted unless authorised by Volkswagen AG. Volkswagen AG does not guarantee or accept any liability with respect to the correctness of information in this document. Copyright by Volkswagen AG.

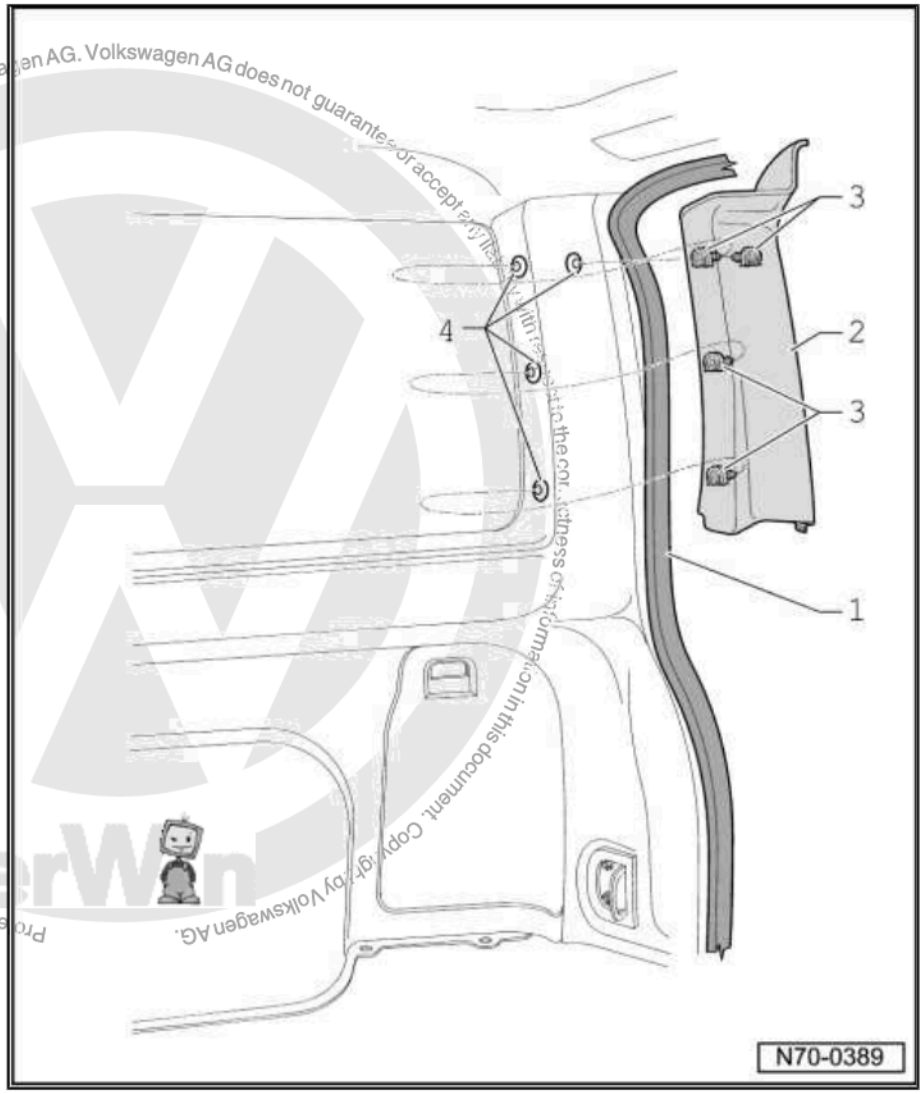

Protected by copyright. Copying for private or commercial purposes, in part or in whole, is not permitted unless authorised by Volkswagen AG. Volkswagen AG does not guarantee or accept any liability with respect to the correctness of information in this document. Copyright by Volkswagen AG.

– Remove seal -1- in trim area -2-.
– Pry trim -2- from D-pillar with Pry Lever - 80-200- and remove upward.

Installing

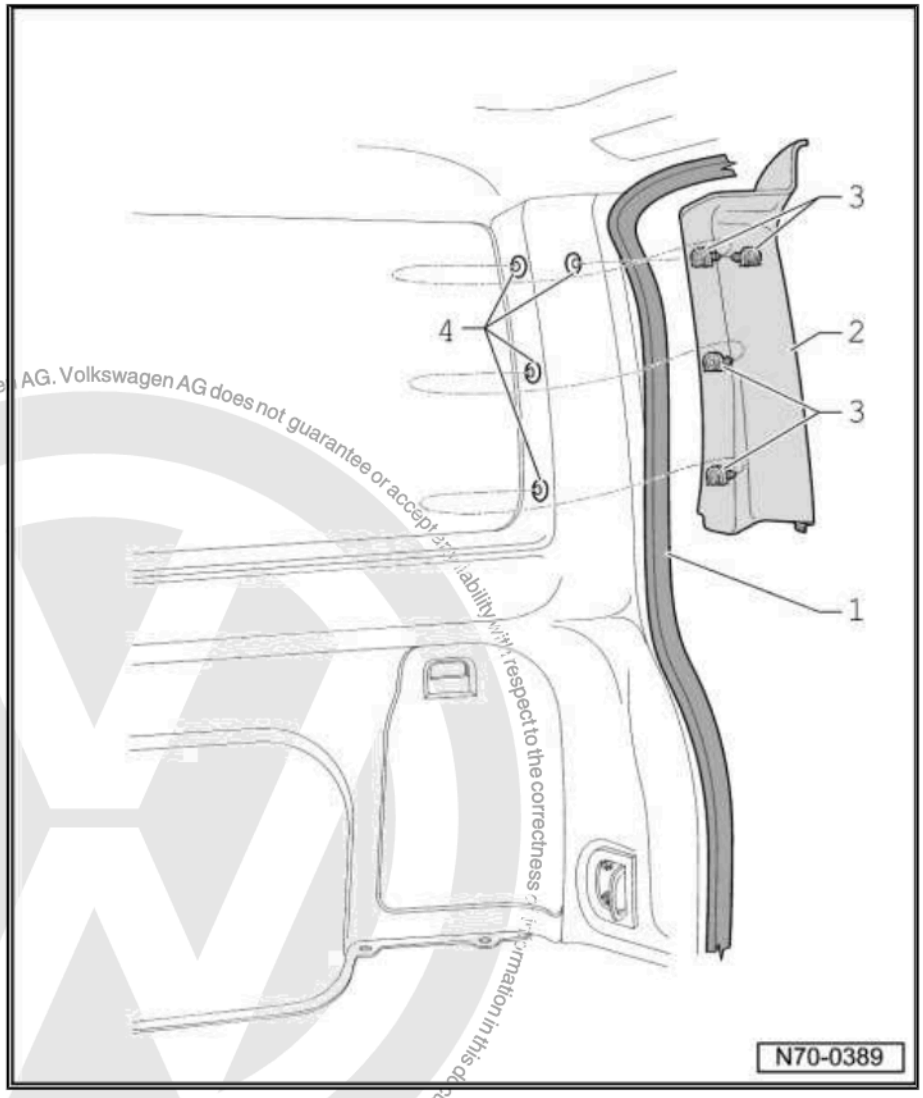

Copyright by Volkswagen AG. Volkswagen AG does not guarantee or accept any liability with respect to the correctness of information in this document. Copyright by Volkswagen AG. Reproduced by copyright. Copying for private or commercial purposes, in part or in whole, is not permitted unless authorised by Volkswagen AG.

Note

Before installing trim -2-, check clips -3- and mounting sleeves -4-, replace if necessary.

– Insert clips -3- into mounts for trim -2- and press sleeves -4- into C-pillar holes.
– Insert lower edge of D-pillar trim panel -2- behind luggage compartment side trim and clip into D-pillar.
– Seat seal -1- correctly.

2.3.9 Rear Shelf

Removing

– Switch off ignition.

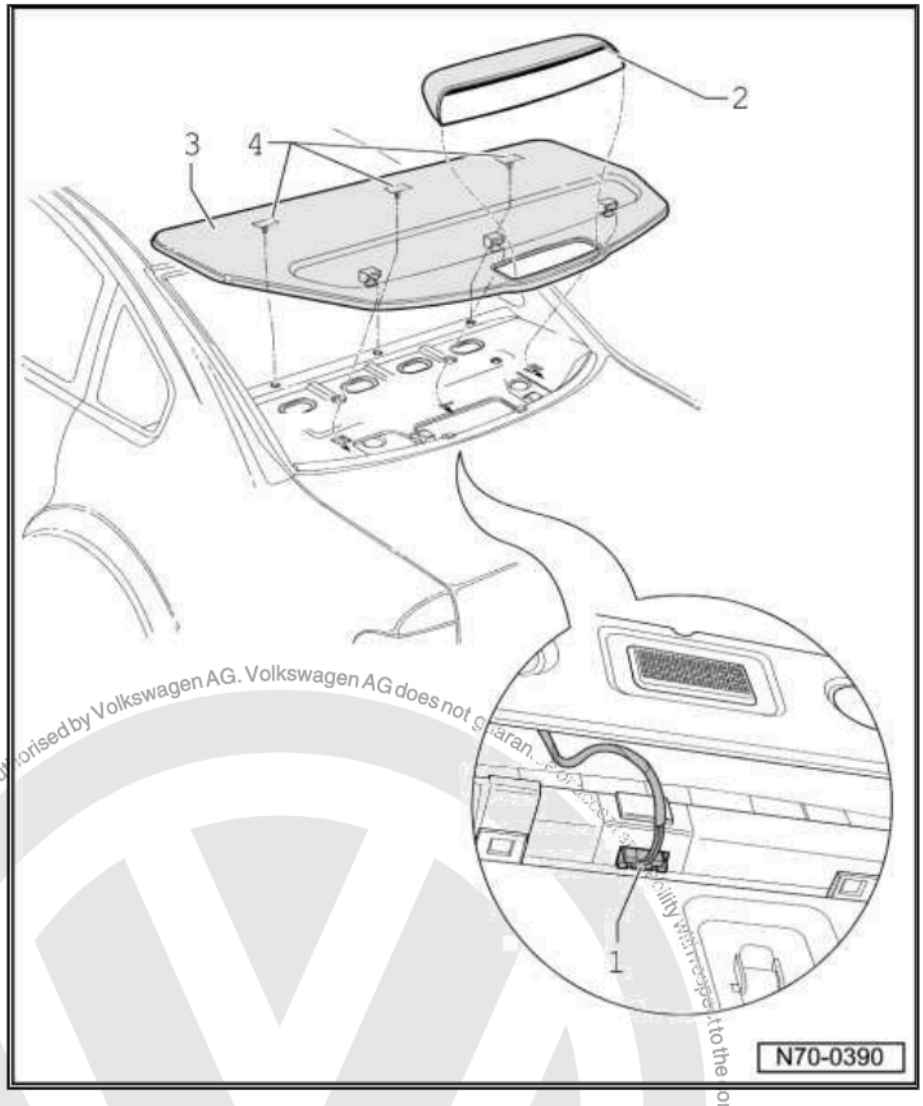

– Push backrests forward.
– Disconnect connector -1- from auxiliary brake lights -2-.
– Unclip rear shelf -3- and remove.

Installing

Protected by copyright. Copying for private or commercial purposes, in part or in whole, is not permitted unless authorised by Volkswagen AG. Volkswagen AG does not guarantee or accept any liability with respect to the correctness of information in this document. Copyright by Volkswagen AG.

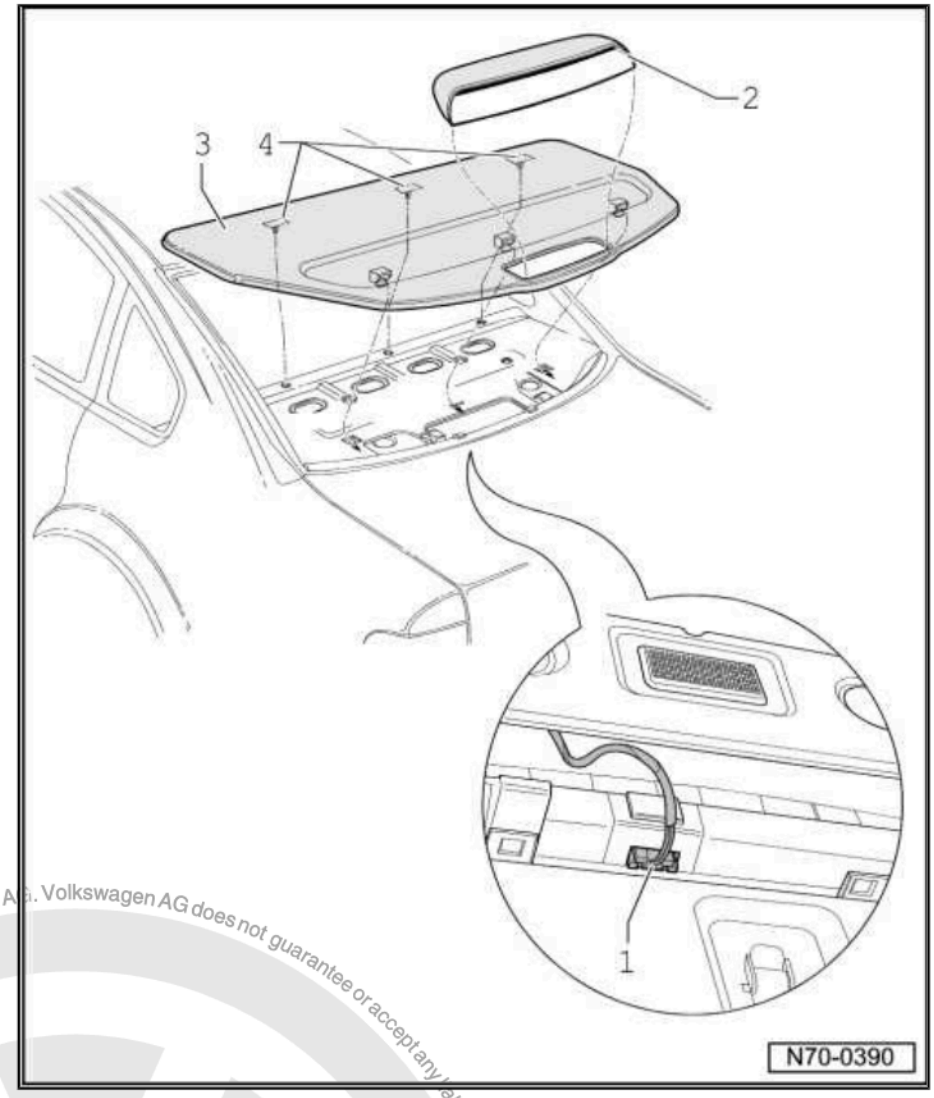

To install, perform the steps used in removal in reverse order.

Note

Before installing, check clips -4-, replace if necessary and insert in rear shelf -3-.

Protected by copyright. Copying for private or commercial purposes, in part or in whole, is not permitted unless authorised by Volkswagen AG. Volkswagen AG does not guarantee or accept any liability with respect to the correctness of information in this document. Copyright by Volkswagen AG.

2.4 Luggage Compartment Trim

⇒ “2.4.1 Luggage Compartment Trim”, page 132

⇒ “2.4.2 Rear Lock Carrier Cover”, page 133

through 09/2000 ⇒ “2.4.3 Rear Lid Trim”, page 135

from 10/2000 ⇒ “2.4.4 Rear Lid Trim”, page 138

from 10/2000
⇒ “2.4.5 Rear Lid Trim with Interior Emergency Release”, page 140

⇒ “2.4.6 Rear luggage Compartment Trim, Wagon”, page 142

⇒ “2.4.7 Rear Lock Carrier Cover, Wagon”, page 143

⇒ “2.4.8 Luggage Compartment Floor”, page 145

from 09/2000 ⇒ “2.4.9 Rear Lid Trim, Wagon”, page 149

from 10/2000 ⇒ “2.4.10 Rear Lid Trim, Wagon”, page 150

⇒ “2.4.11 Luggage Compartment Floor Cover, Wagon”, page 151

2.4.1 Luggage Compartment Trim

Removing

Note

The illustrations cover only the right side of the vehicle, the left side of the vehicle is similar.

– Remove lock carrier cover.
– Remove the right rear bench seat backrest.
– Switch off ignition.
– Loosen hex nut -2- and remove lock bolt -3-.
– Pull cover -1- in upper area out of clip -4-, press lower tab -6- to rear from sill panel -7- and remove upward with tab -5-.

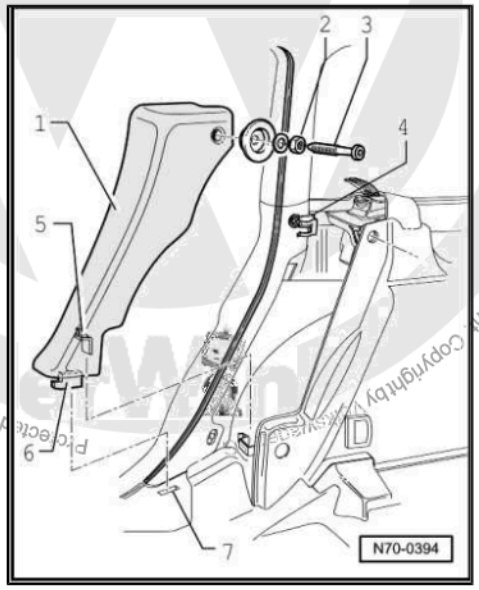

Copyright by Volkswagen AG. Volkswagen AG does not guarantee or accept any liability with respect to the correctness of information in this document. Copying for private or commercial purposes, in part or in whole, is not permitted unless authorised by Volkswagen AG.

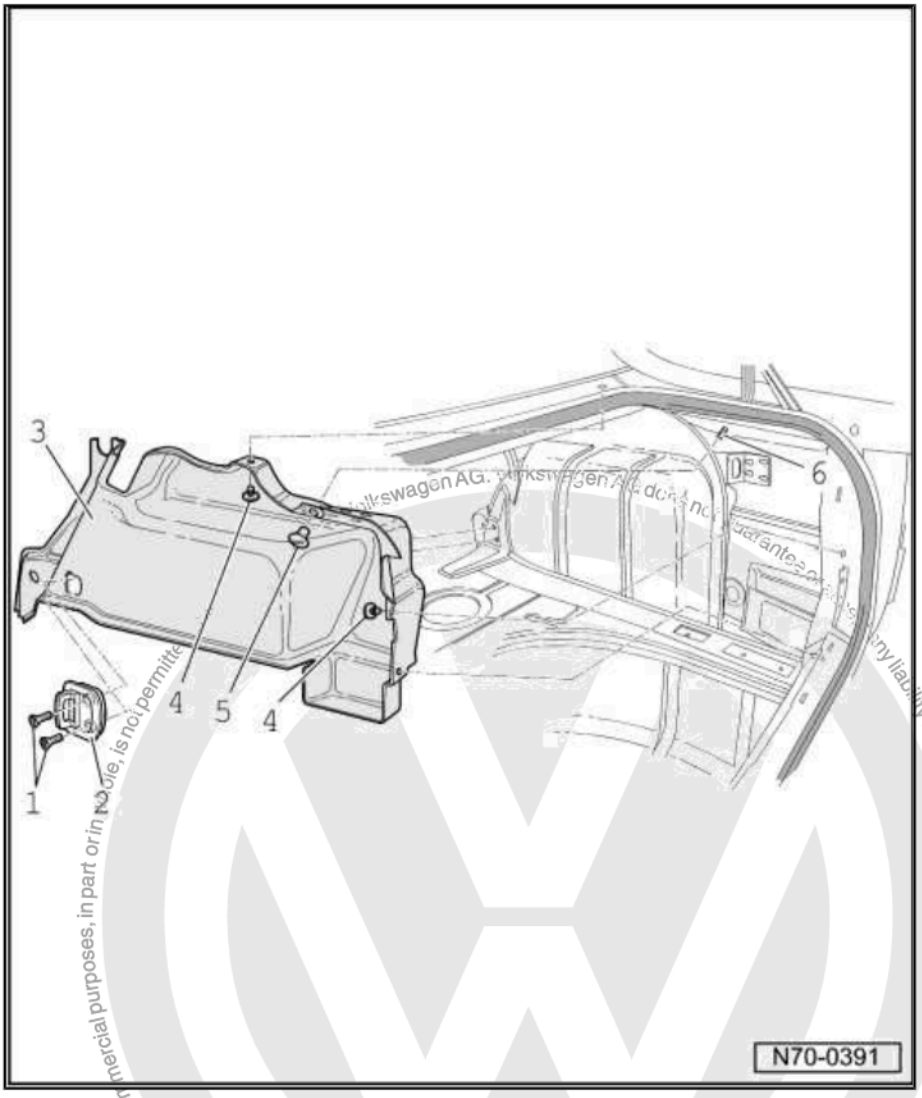

- Remove the bolts -1-.
- Remove tie-down -2-.
- Remove clips -4-.
- Remove plugs -5- from threaded pin -6-.
- Remove trim -3-.

Installing

To install, perform the steps used in removal in reverse order.

2.4.2 Rear Lock Carrier Cover

Removing

Protected by copyright. Copying for private or commercial purposes, in part or in whole, is not permitted. Copyright by Volkswagen AG. Volkswagen AG does not guarantee or accept any liability with respect to the correctness of information in this document.

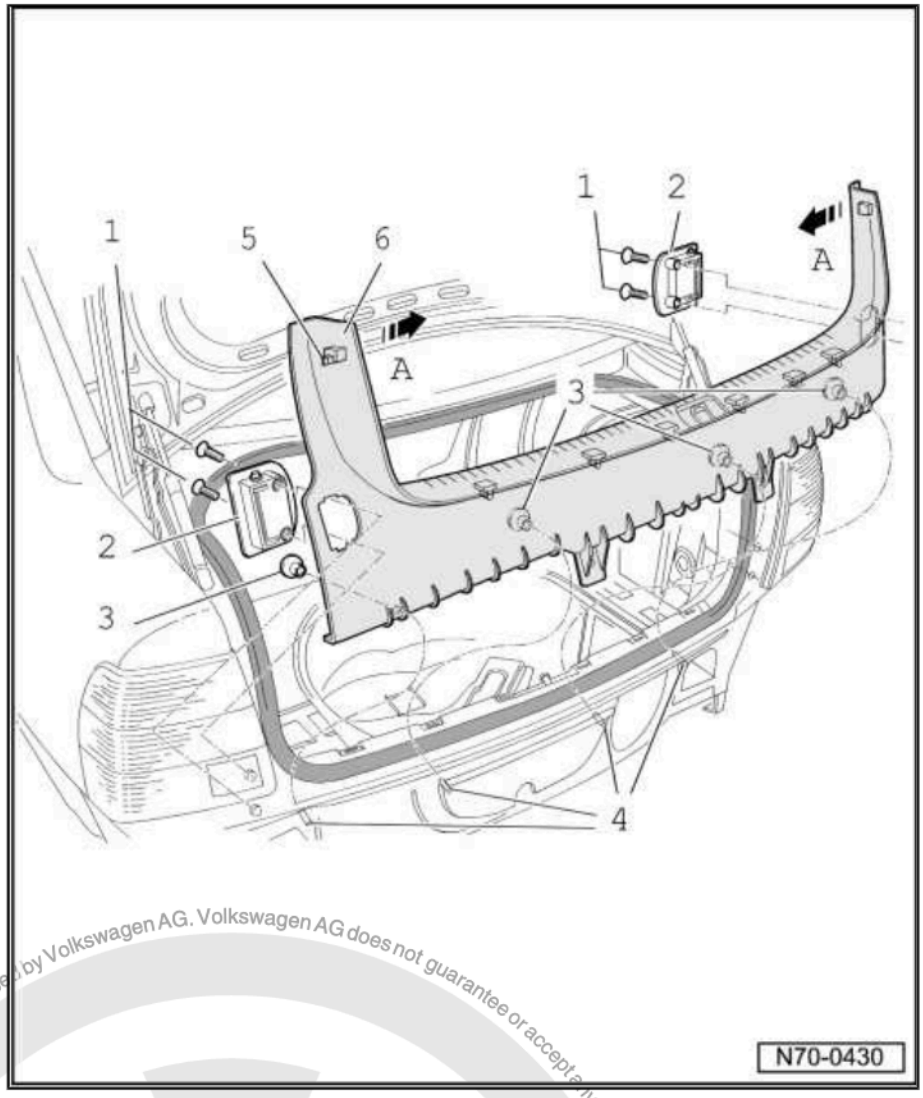

– Remove the bolts -1-.
– Remove tie-downs -2-.
– Remove four plugs -3- from threaded pins -4- with screwdriver.
– Unclip upper corners of cover -6- -A arrows-.
– Unclip cover upward from lock carrier.

Installing

Protected by copyright. Copying for private or commercial purposes, in part or in whole is not permitted unless authorised by Volkswagen AG. Volkswagen AG does not guarantee or accept any liability with respect to the correctness of information in this document. Copyright by Volkswagen AG.

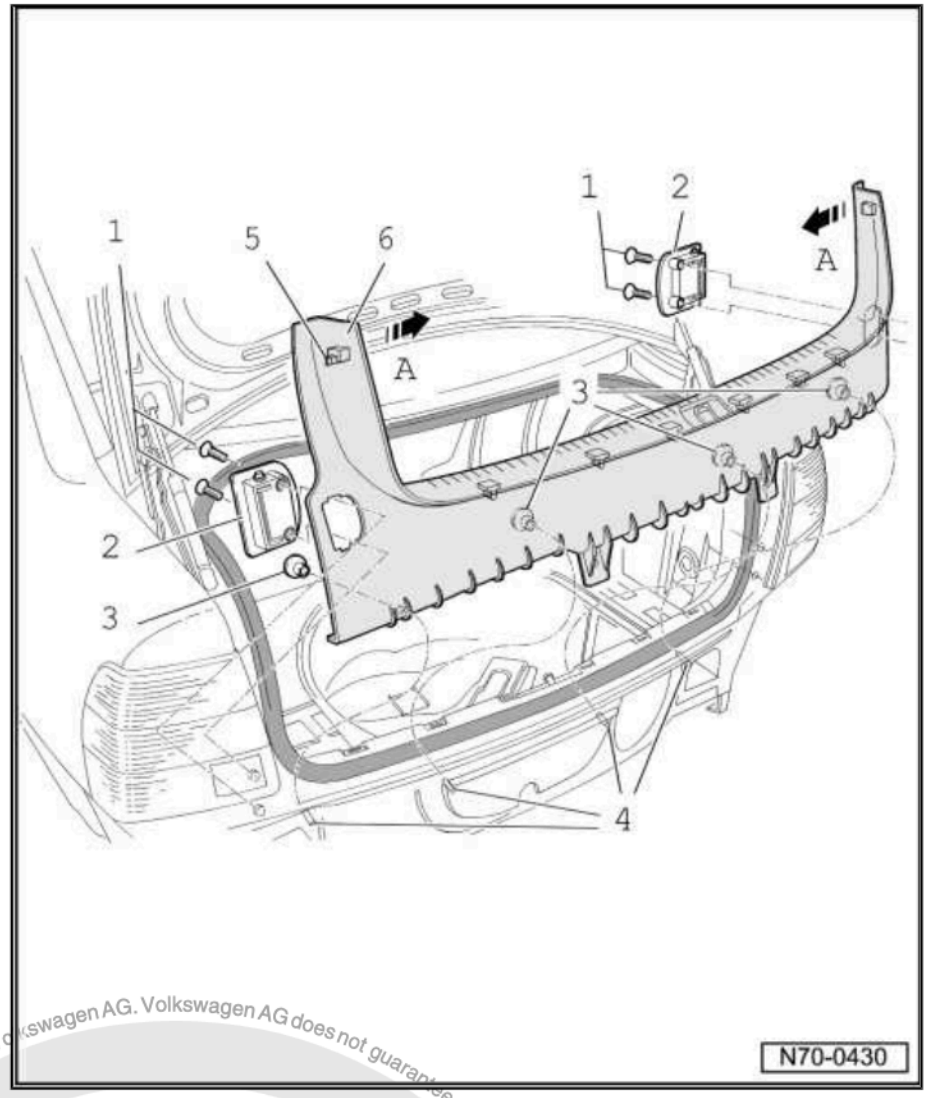

To install, perform the steps used in removal in reverse order.

Note

Before installing, check plugs -3- and clips -5-, replace if necessary.

2.4.3 Rear Lid Trim

Removing

– Screw in locking mechanism -2-.
– Fold bracket -1- upward and remove warning triangle -3- -arrow-.

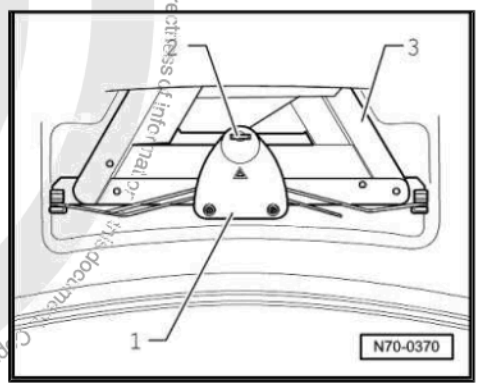

Protected by copyright. Copying for private or commercial purposes, in part or in whole, is not permitted unless authorised by Volkswagen AG. Volkswagen AG does not guarantee or accept any liability with respect to the correctness of information. Copyright by Volkswagen AG.

– Remove the screws -arrows-.
– Slide bracket -1- upward and remove.

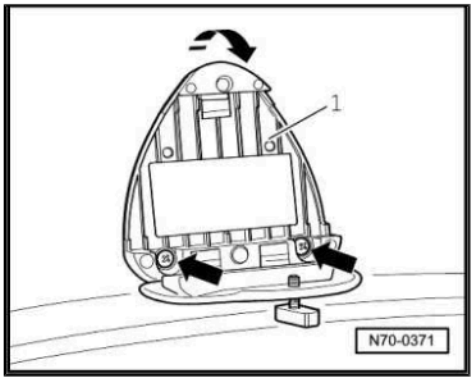

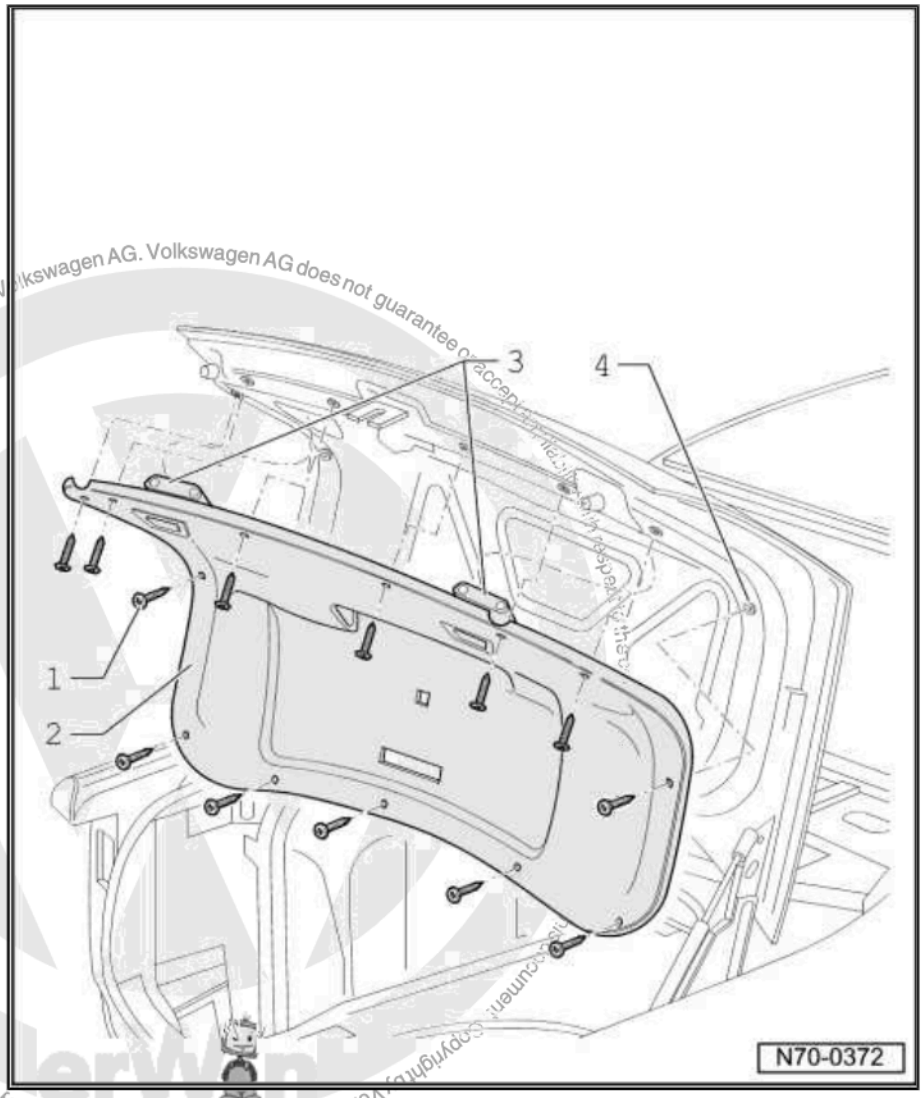

Protected by copyright. Copying for private or commercial purposes, in part or in whole, is not permitted unless authorised by Volkswagen AG. Volkswagen AG does not guarantee or accept any liability with respect to the correctness of information in this document. Copyright by Volkswagen AG.

– Remove the 13 screws -1-.
– Pull trim -2- out from lid with grip recesses -3- and remove.

Installing

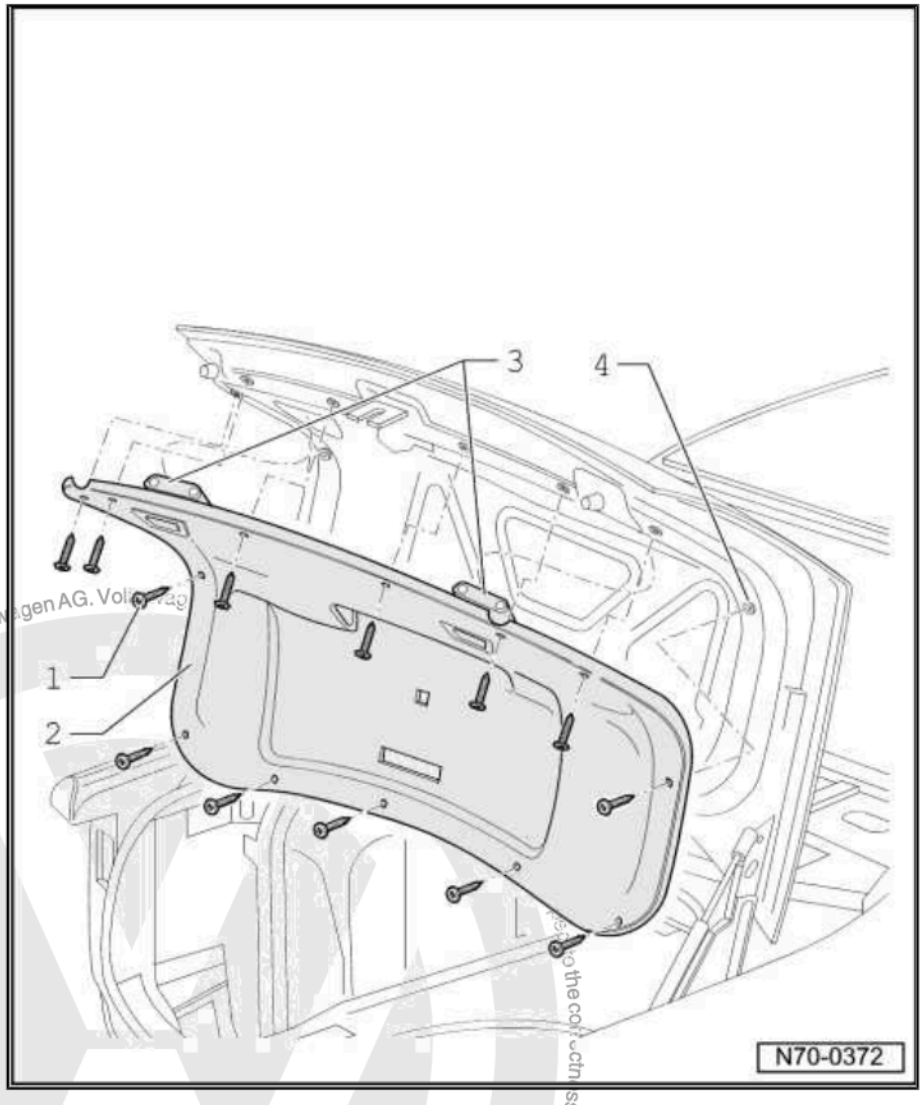

- Check expanding nuts -4-, replace if necessary and insert into holes of lid.
- Place trim -2- in installation position and bolt firmly.
- Insert bracket for warning triangle and bolt firmly.
- Insert warning triangle into bracket.
- Fold bracket closed and bolt down locking mechanism.

Protected by copyright. Copying for private or commercial purposes, in part or in whole, is not permitted unless authorised by Volkswagen AG. Volkswagen AG. Copyright by Volkswagen AG. Refer to the correctness of information in this document.

2.4.4 Rear Lid Trim

Removing

– Screw in locking mechanism -2-.
– Fold bracket -1- upward and remove warning triangle -3-.

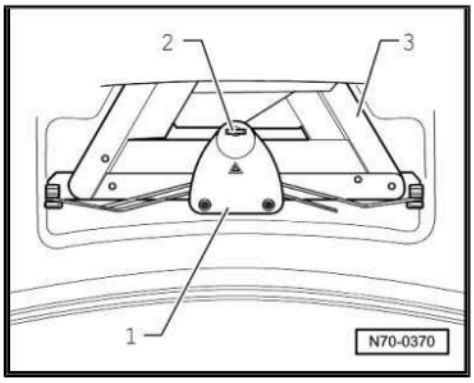

– Remove the screws -arrows-.
– Slide bracket -1- upward and remove.

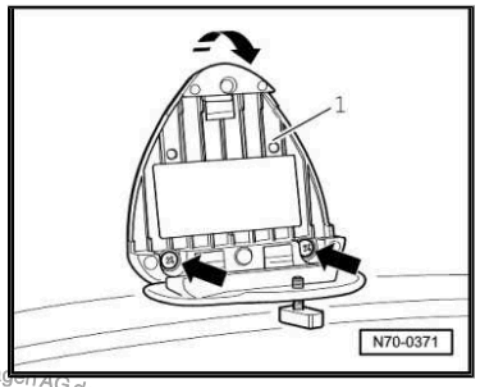

Protected by copyright. Copying for private or commercial purposes, in part or in whole, is not permitted unless authorised by Volkswagen AG. Volkswagen AG does not guarantee or accept any liability with respect to the correctness of information in this document. Copyright by Volkswagen AG.

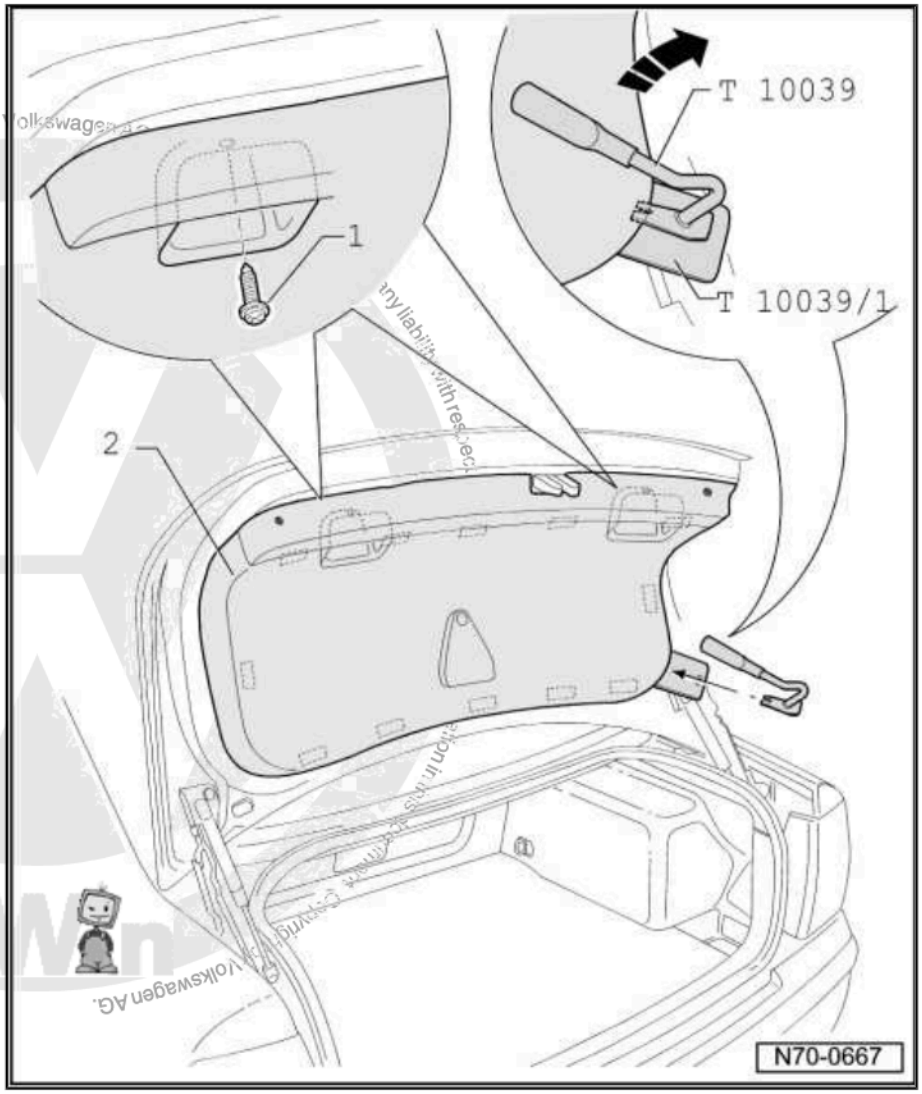

Protected by copyright. Copying for private or commercial purposes, in part or in whole, is not permitted unless authorised by Volkswagen AG. Volkswagen AG

– Remove two screws -1- from grip recesses.

– Position Trim Release Lever - Wedge - T10039/1- in area of steel clips and then unclip trim from rear lid with Trim Release Lever - T10039- .

Installing

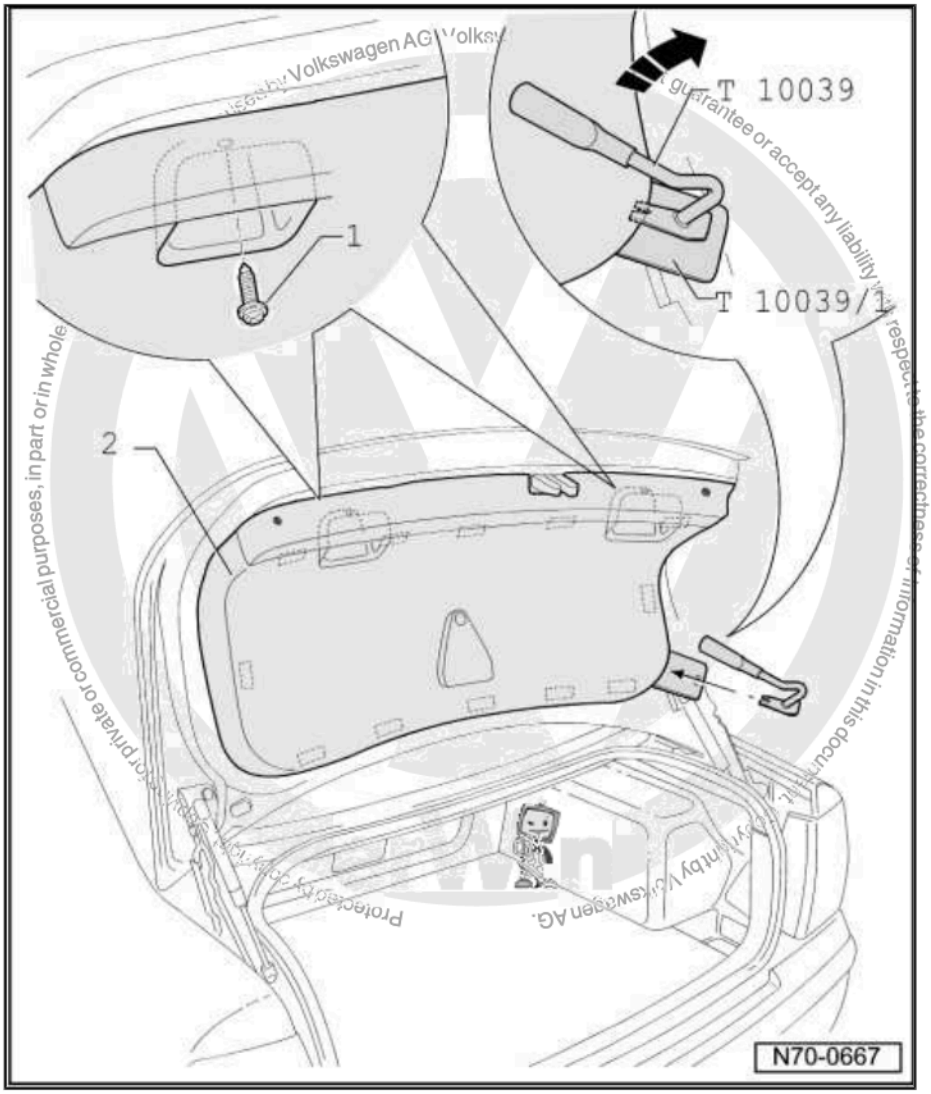

Note

Before installing, check steel clips and replace if necessary.

Trim -2- installation occurs in reverse sequence.

– Insert bracket for warning triangle and bolt firmly.
– Insert warning triangle into bracket.
– Fold bracket closed and bolt down locking mechanism.

2.4.5 Rear Lid Trim with Interior Emergency Release

Removing

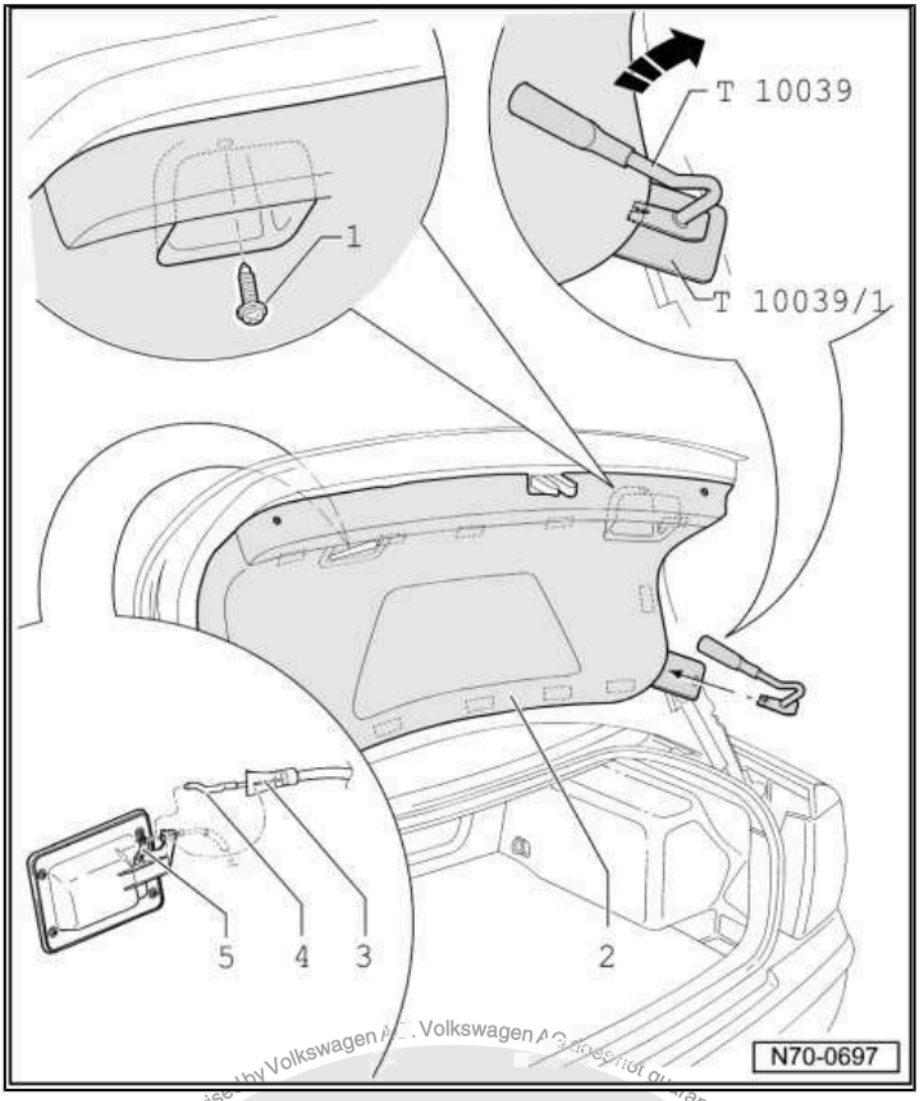

– Remove screw -1- from grip recess.
– Position Trim Release Lever - Wedge - T10039/1- in area of steel clips and then unclip trim -2- from rear lid with Trim Release Lever - T10039- .
– Release clip -3- and disengage release -4- from operating lever -5-.

Installing

– To install, perform the steps used for removal in reverse order.

Note

Before installing, check steel clips and replace if necessary.

Protected by copyright. Copying for private or commercial purposes, in part or in whole, is not permitted unless authorised by Volkswagen AG. Volkswagen AG does not guarantee or accept any liability with respect to the correctness of information in this document. Copyright by Volkswagen AG.

2.4.6 Rear luggage Compartment Trim, Wagon

Note

The illustrations cover only the right side of the vehicle, the left side of the vehicle is similar.

Removing

- Switch off ignition.
- Remove luggage compartment cover.
- Remove lock carrier cover.
- Remove the right rear bench seat backrest.
- Remove storage area floor covering. Refer to ⇒ "2.4.11 Luggage Compartment Floor Cover, Wagon", page 151 .
- Loosen hex nut -2- and remove lock bolt -3-.
- Pull cushion -1- in upper area out of clip -4-, press lower tab -6- to rear from sill panel -7- and remove upward with tab -5-.

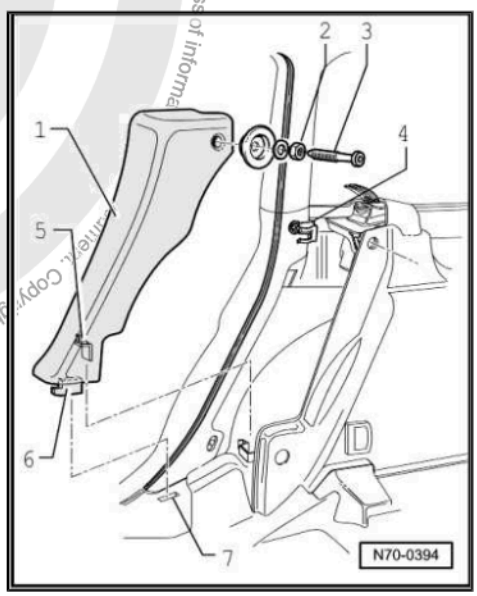

Protected by copyright. Copying for private or commercial purposes, partly or in whole, is not permitted unless authorised by Volkswagen AG. Volkswagen AG does not guarantee or accept any liability with respect to the correctness of information. Copyright by Volkswagen AG.

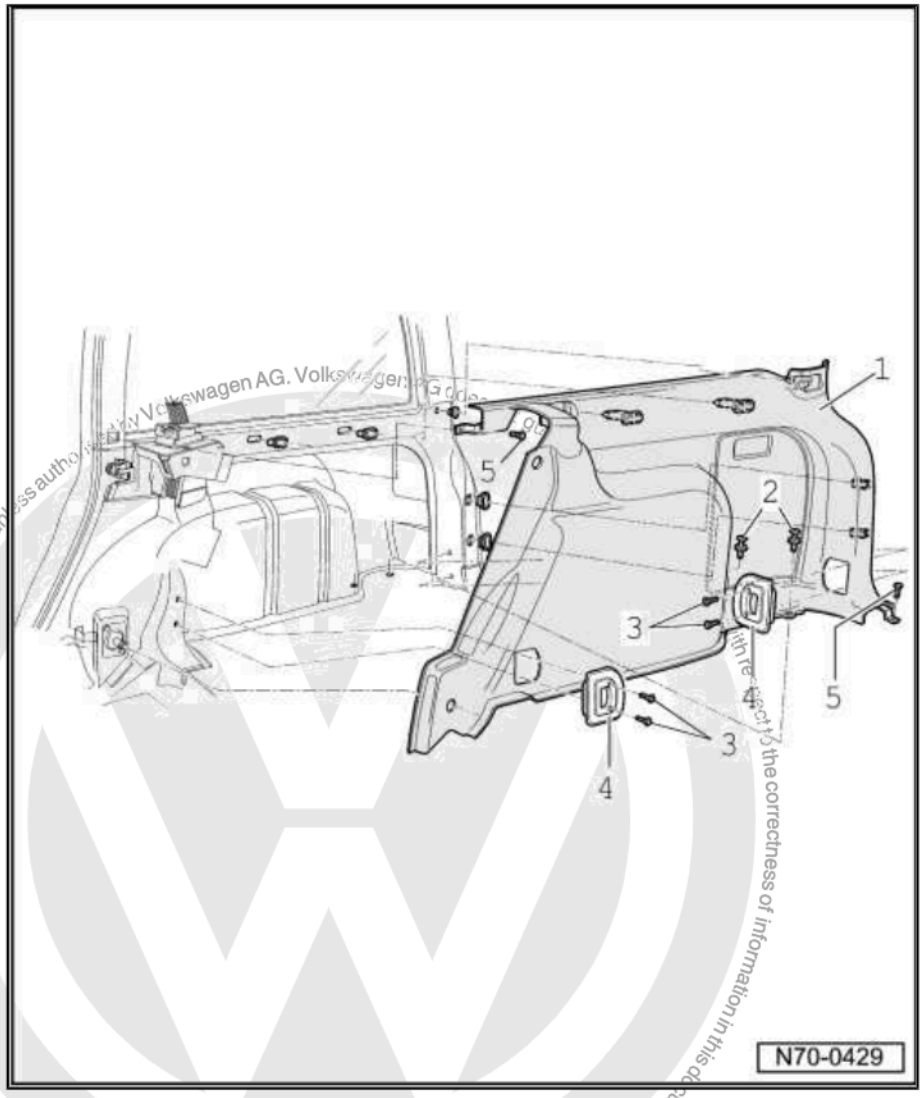

Protected by copyright. Copying for private or commercial purposes, in part or in whole, is not permitted unless authorised by Volkswagen AG. Volkswagen AG does not guarantee or accept any liability with respect to the correctness of information in this document. Copyright by Volkswagen AG.

- Press out spreader clip -2- with Pry Lever - 80-200- .
- Remove screws -3- and remove tie-downs -4-.
- Remove the bolts -5-.
- Remove trim -1-.

Installing

To install, perform the steps used in removal in reverse order.

2.4.7 Rear Lock Carrier Cover, Wagon

Removing

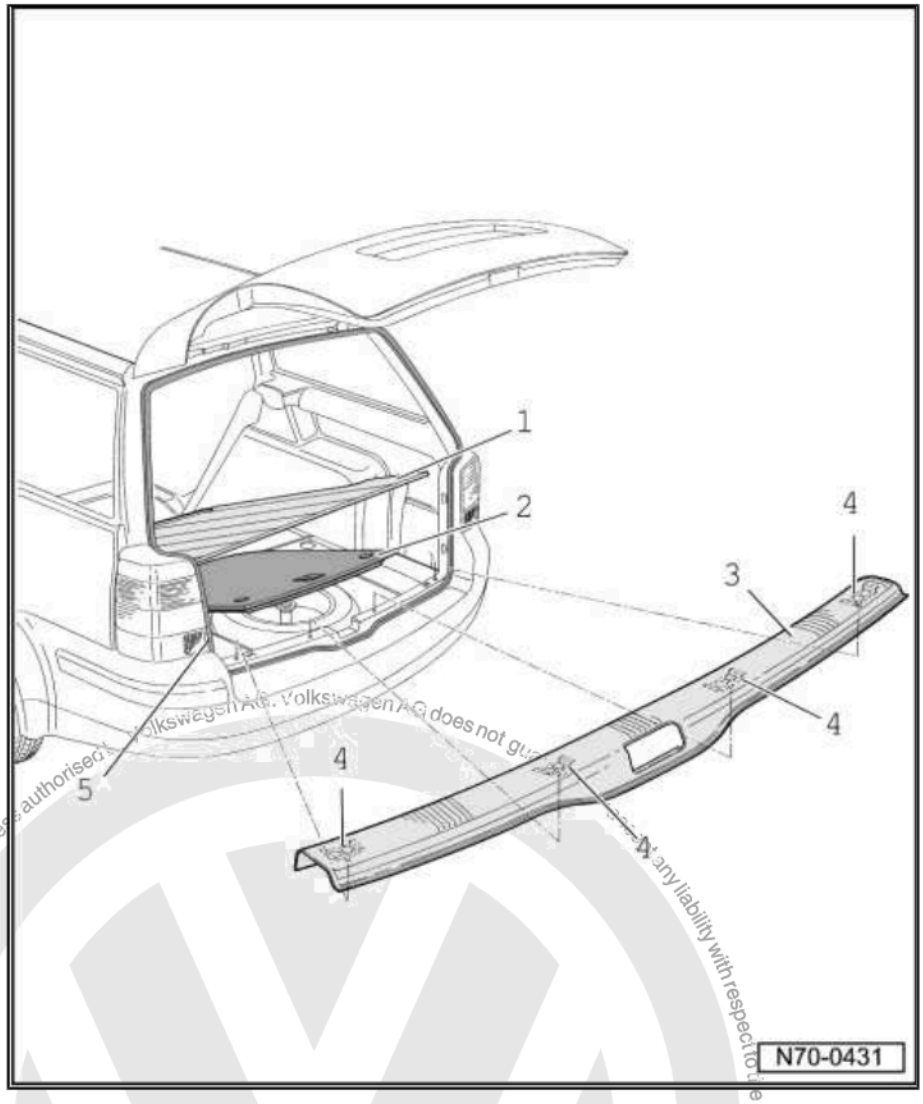

– Raise luggage compartment floor trim -1-.
– Open spare wheel well cover -2-, raise and support.
– Unclip lock carrier cover -3-.

Installing

Protected by copyright. Copying for private or commercial purposes, in part or in whole, is not permitted unless authorised by Volkswagen AG. Volkswagen AG does not guarantee or accept any liability with respect to the correctness of information in this document. Copyright by Volkswagen AG.

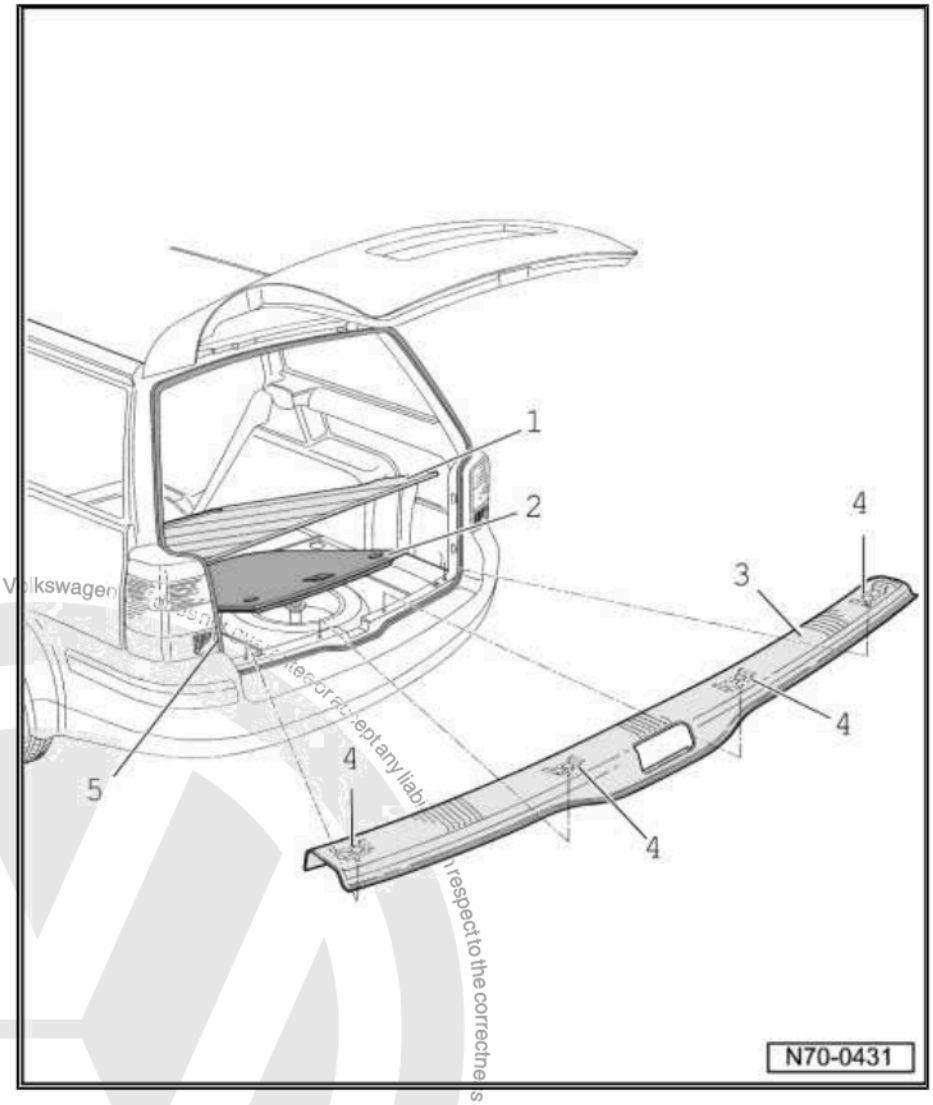

To install, perform the steps used in removal in reverse order.

Note

- *Before installing cover, check clips -4- and replace if necessary.*
- *After installing, seat seal -5- again.*

2.4.8 Luggage Compartment Floor

Removing

Protected by copyright. Copying for private or commercial purposes, in part or in whole, is not permitted unless authorised by Volkswagen AG. Volkswagen AG does not guarantee or accept any liability with respect to the correctness of information in this document. Copyright by Volkswagen AG.

Volkswagen AG does not guarantee or accept any liability with respect to the correctness of information in this document. Copyright by Volkswagen AG. Protected by copyright. Copying for private or commercial purposes, in part or in whole, is not permitted unless authorised by Volkswagen AG.

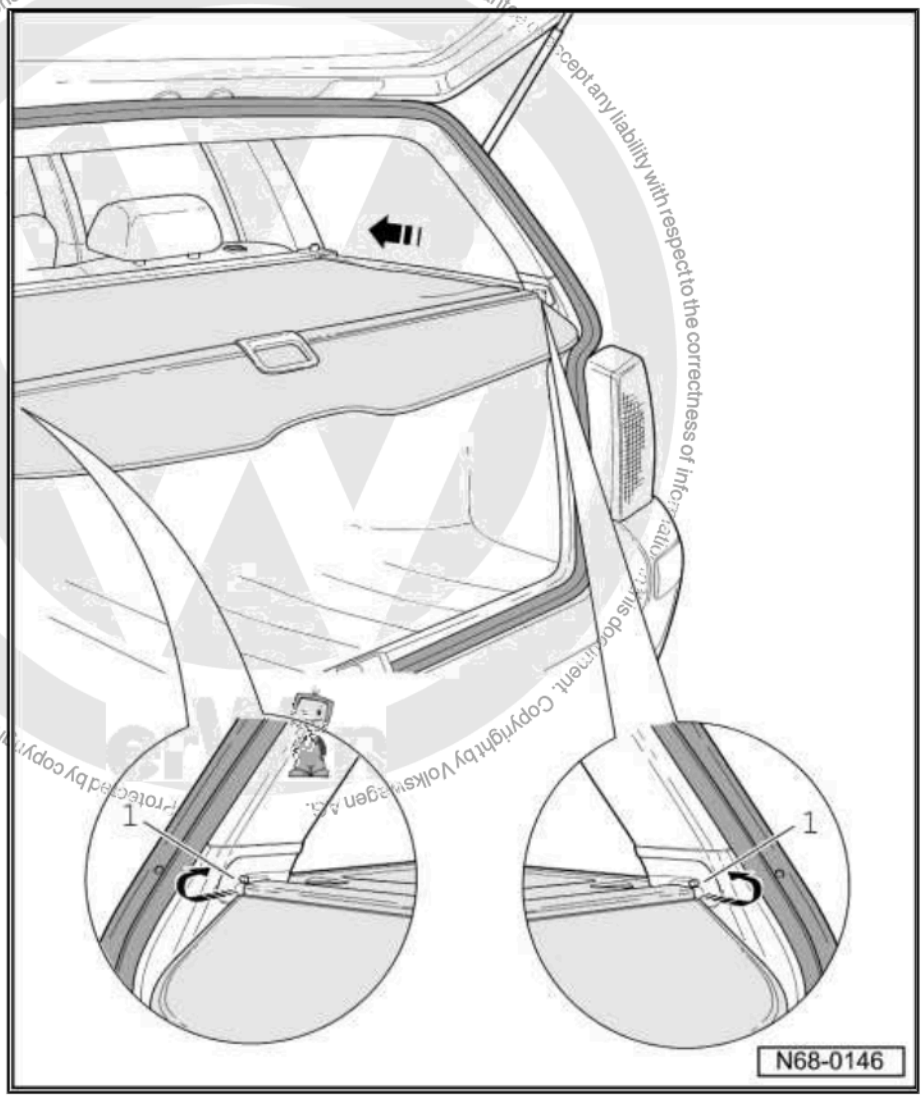

- Pull luggage compartment floor cover back out of retainers -1-.
- Carefully roll up in direction of -arrow- (automatic retractor).
- Press locking knob -1- down.
- Remove luggage compartment floor cover upward out of right side trim -arrow-.

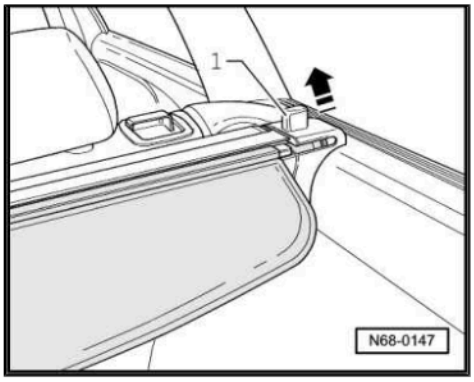

– Remove luggage compartment cover out of left side trim -1- -arrow-.

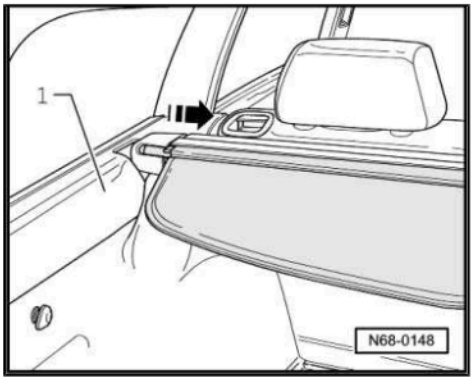

Installing

– Guide luggage compartment cover into left side trim -1- -arrow-.

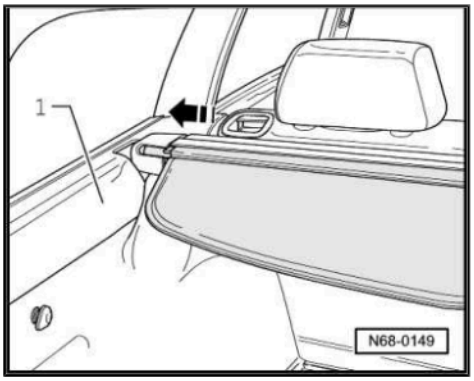

– Engage luggage compartment cover in right side trim -1- -arrow-.

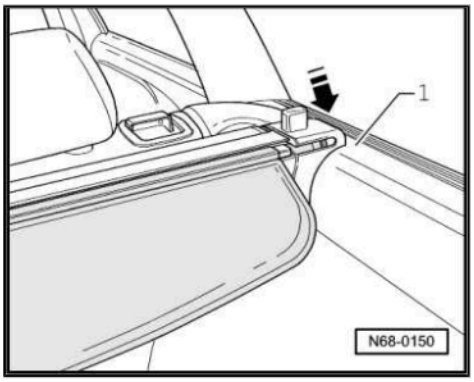

Protected by copyright. Copying for private or commercial purposes, in part or in whole, is not permitted unless authorised by Volkswagen AG. Volkswagen AG does not guarantee or accept any liability with respect to the correctness of information in this document. Copyright by Volkswagen AG.

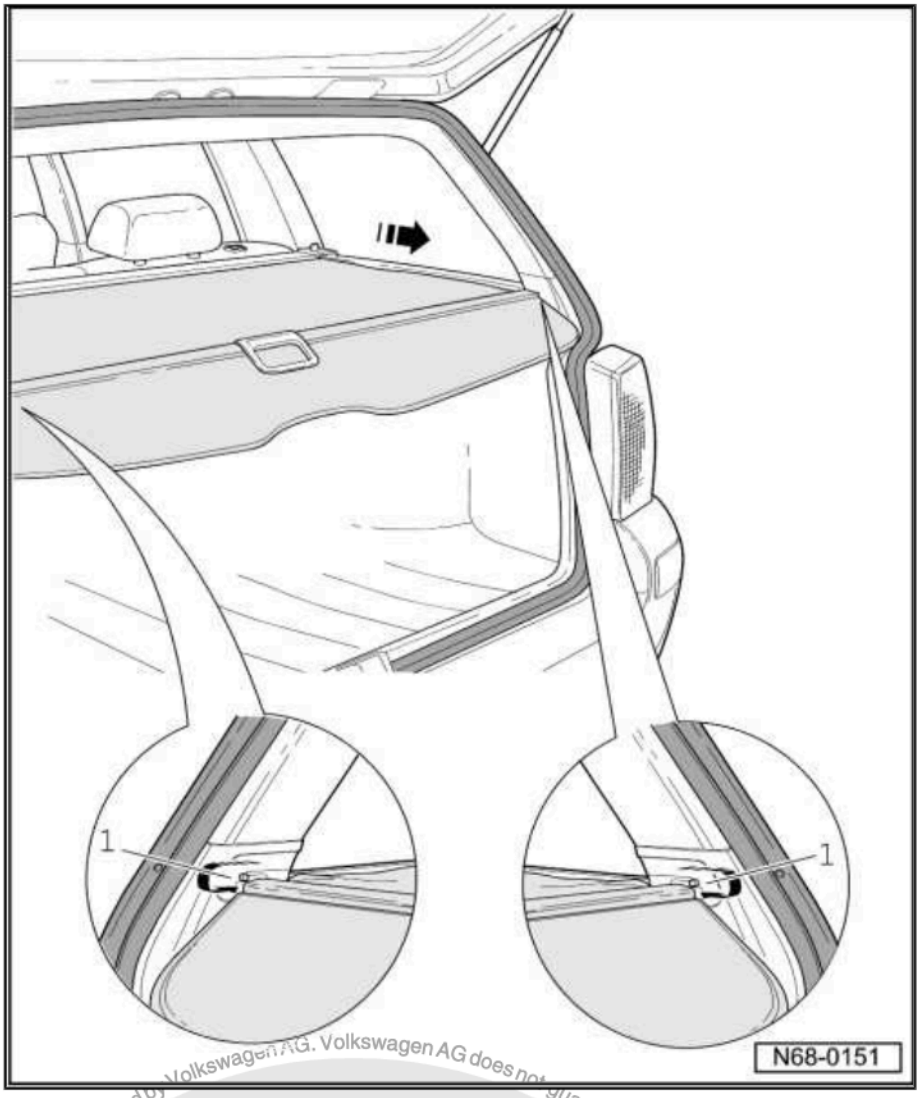

– Engage luggage compartment cover in rear retainers -1- -arrow-.

Protected by copyright. Copying for private or commercial purposes, in part or in whole, is not permitted unless authorised by Volkswagen AG. Volkswagen AG does not guarantee or accept any liability with respect to the correctness of information in this document. Copyright by Volkswagen AG.

2.4.9 Rear Lid Trim, Wagon

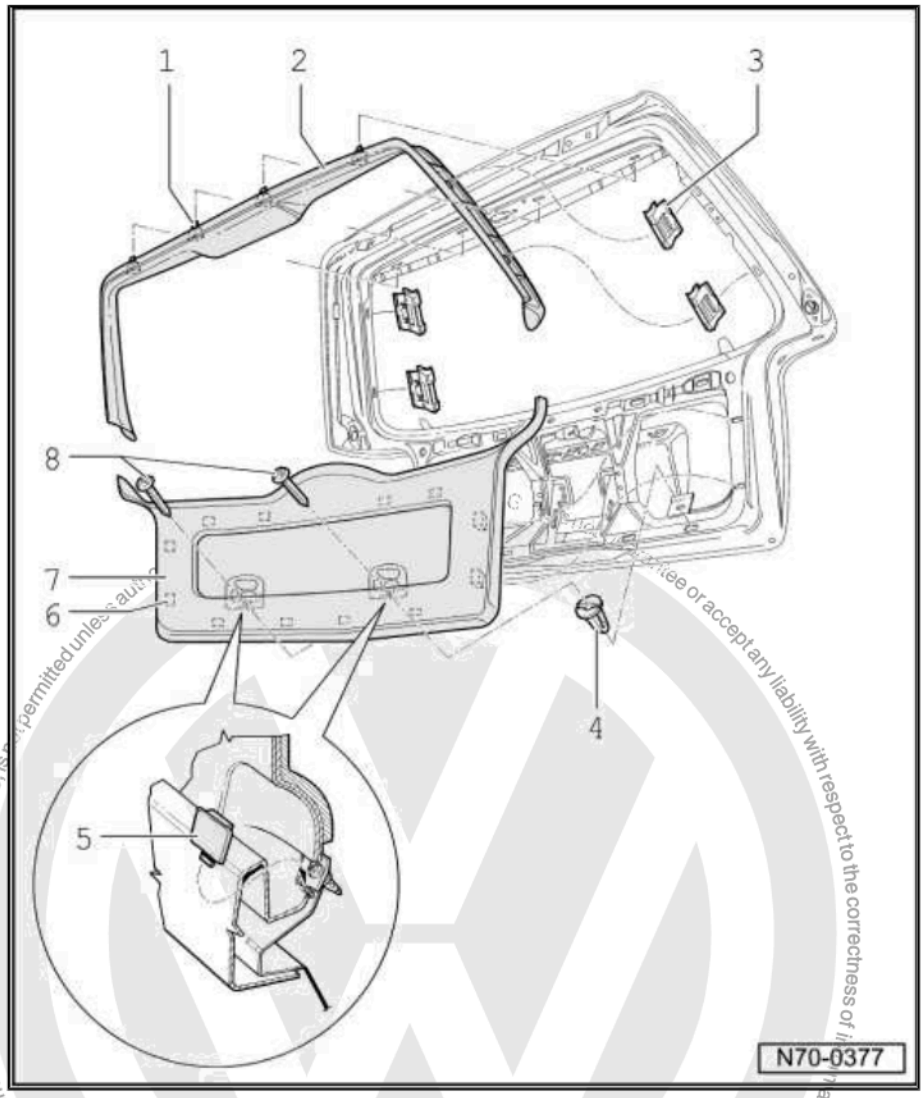

1 - Clip
- ❑ Qty. 4

2 - Upper Trim
- ❑ Removing:
- ❑ Remove lower trim -7-.
- ❑ Unclip upper trim -2- first at sides out of clips -3-, then unclip at upper area.
- ❑ Before installing trim, check clips -1-, replace if necessary and insert in trim mounts.

3 - Clips
- ❑ Qty. 4
- ❑ Before installing upper trim, check for damage and replace if necessary.

4 - Expanding Nut
- ❑ Quantity: 2

5 - Cap
- ❑ Quantity: 2

6 - Clip
- ❑ Quantity: twelve

7 - Lower Trim
- ❑ Removing:
- ❑ Pry off caps -5-.
- ❑ Remove the bolts -8-.
- ❑ Unclip lower trim -7- beginning at bottom.
- ❑ Before installing trim, check clips -6-, replace if necessary and insert in trim mounts.

8 - Bolt
- ❑ Quantity: 2

Protected by copyright. Copying for private or commercial purposes, in part or in whole, is not permitted unless authorised. Copyright by Volkswagen AG. No guarantee or acceptance of any liability with respect to the correctness of information in this document.

2.4.10 Rear Lid Trim, Wagon

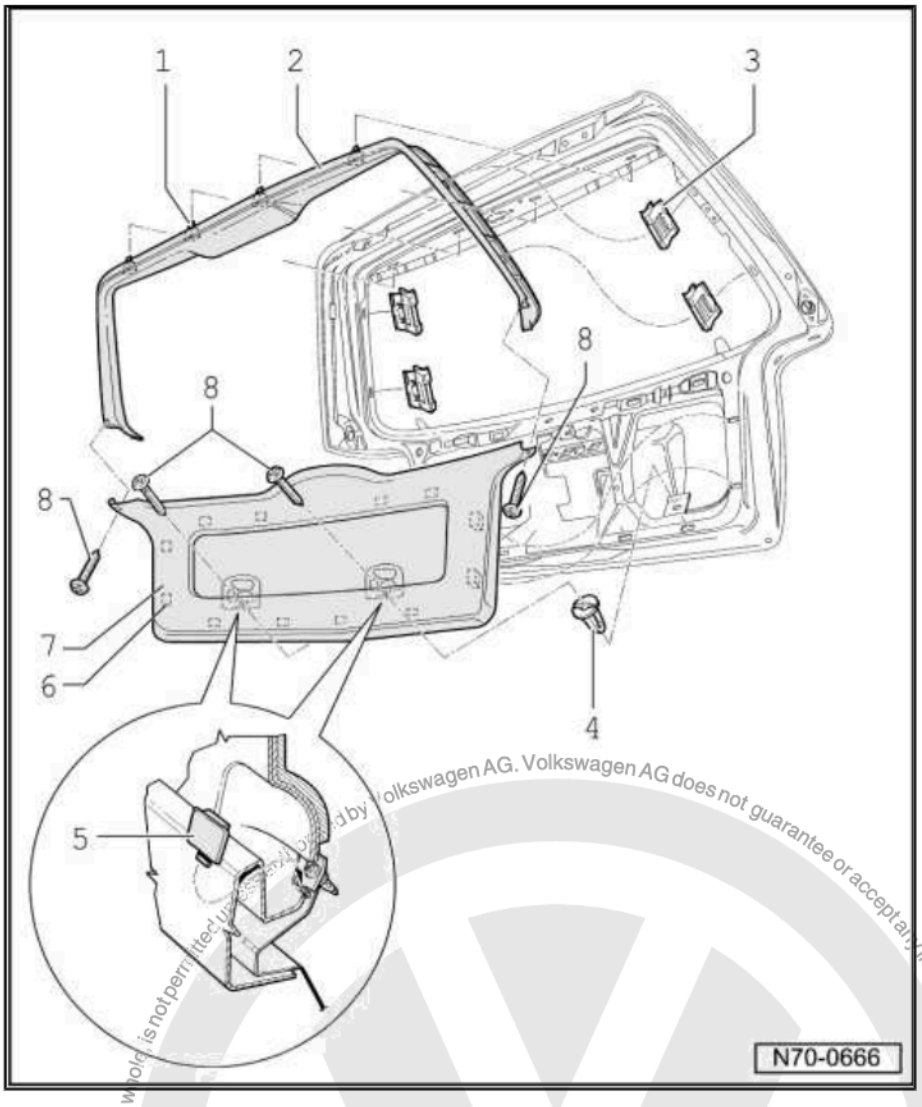

1 - Clip
- ❑ Qty. 4

2 - Upper Trim
- ❑ Removing:
- ❑ Remove lower trim -7-.
- ❑ Unclip upper trim -2- first at sides out of clips -3-, then unclip at upper area.
- ❑ Before installing trim, check clips -1-, replace if necessary and insert in trim mounts.

3 - Clips
- ❑ Qty. 4
- ❑ Before installing upper trim, check for damage and replace if necessary.

4 - Expanding Nut
- ❑ Quantity: 2

5 - Cap
- ❑ Quantity: 2

6 - Clip
- ❑ Quantity: twelve

7 - Lower Trim
- ❑ Removing:
- ❑ Pry off caps -5-.
- ❑ Remove the bolts -8-.
- ❑ Unclip lower trim -7- beginning at bottom.
- ❑ Before installing trim, check clips -6-, replace if necessary and insert in trim mounts.

8 - Bolt
- ❑ Qty. 4

Protected by copyright. Copying for private or commercial purposes, in part or in whole, is not permitted unless authorised by Volkswagen AG. Volkswagen AG does not guarantee or accept any liability with respect to the correctness of information in this document. Copyright by Volkswagen AG.

2.4.11 Luggage Compartment Floor Cover, Wagon

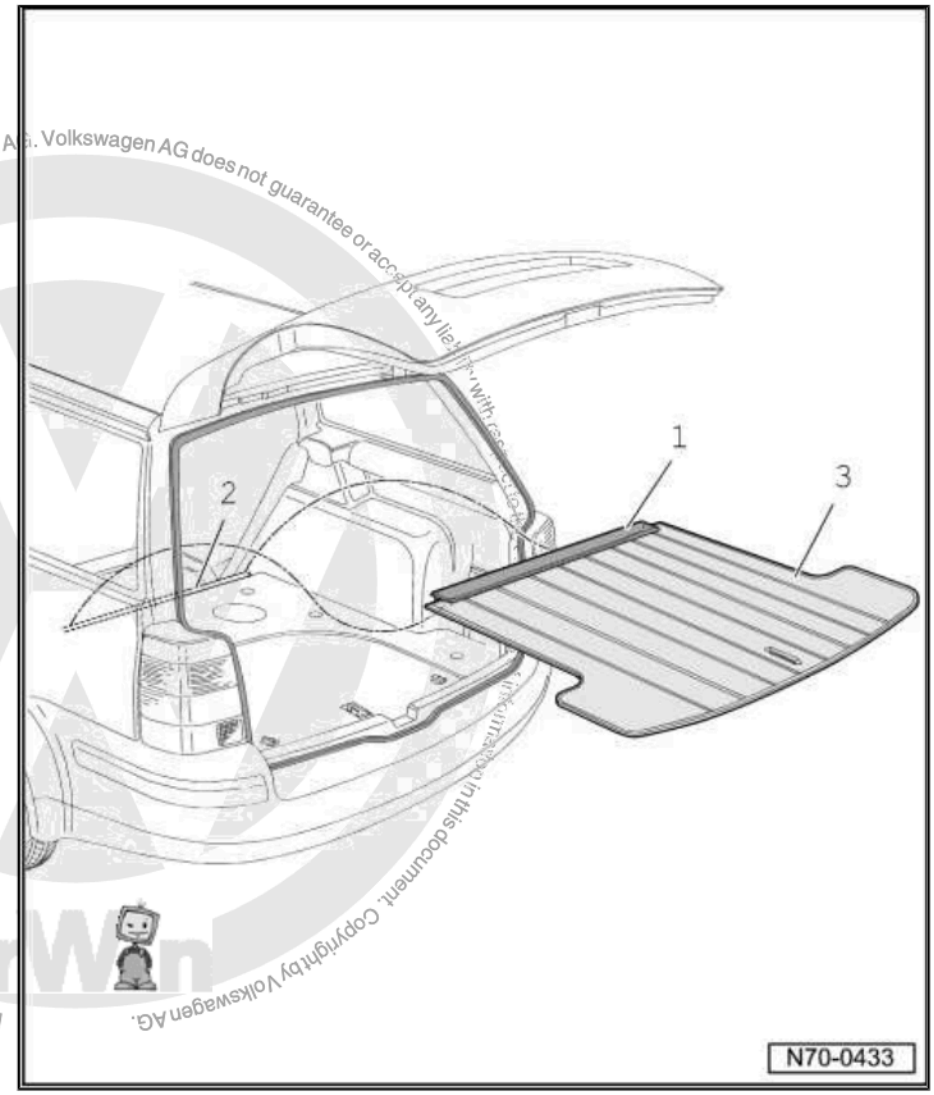

Protected by copyright. Copying for private or commercial purposes, in part or in whole, is not permitted unless authorised by Volkswagen AG. Volkswagen AG does not guarantee or accept any liability with respect to the contents in this document. Copyright by Volkswagen AG.

- Release rear seat backrests and fold forward.
- Remove weather stripping -1- on cover -3- from securing tracks -2-.
- Remove cover -3- back out of vehicle.

2.5 Headliner with Tilt/Slide Sunroof, Sedan

Removing

Note

Due to equipment variations, small deviations must be considered during removal and installation.

- Switch off ignition.
- Remove upper A-pillars trim. Refer to ⇒ “2.3.1 Upper A-Pillar Trim”, page 112 .
- Remove upper C/D-pillar trim. Refer to ⇒ “2.3.5 Upper C/D-Pillar Trim, Sedan”, page 120 .

– Unclip upper trim -1- on -B- pillar, first on sides then in upper area.
– The seat belt anchor -2- does not need to be removed.

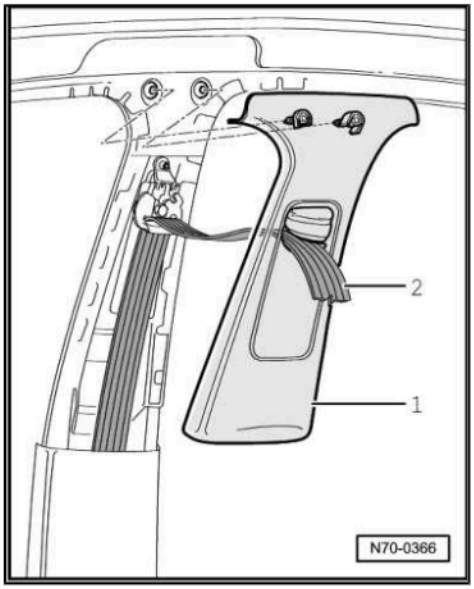

Remove grab handles

– Fold grab handle -1- downward.
– Pry up covers -2- using a screwdriver and fold upward.
– Remove the screws -3- and remove grab handle -1-.

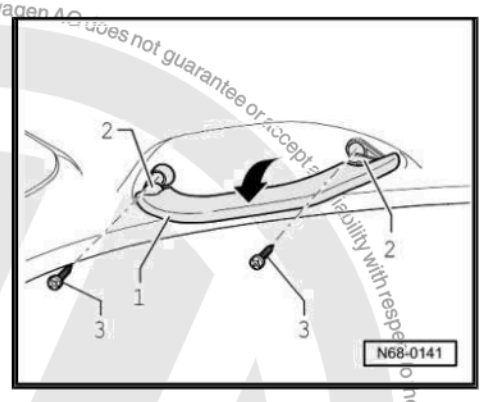

– Unclip trim -1- in direction of -arrow- and remove.

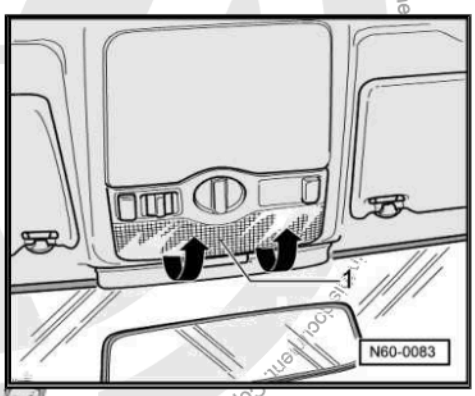

– Remove the bolts -arrows- and remove automatic rotary switch.
– Unclip and disconnect harness connector.

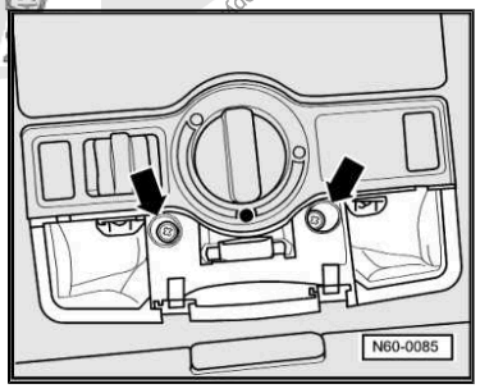

Protected by copyright. Copying for private or commercial purposes, in part or in whole, is not permitted unless authorised by Volkswagen AG. Volkswagen AG does not guarantee or accept any liability with respect to the correctness and completeness of this copy.

Remove visors

- Unhook sun visor -1- out of mount -2-.
- Pry off cap -6-.
- Remove the bolt -5-.
- Remove sun visor mount -4- from mounting and disconnect harness connector -3-.
- Pry off cap -7-.
- Remove bolts -8- and remove mounts -2-.

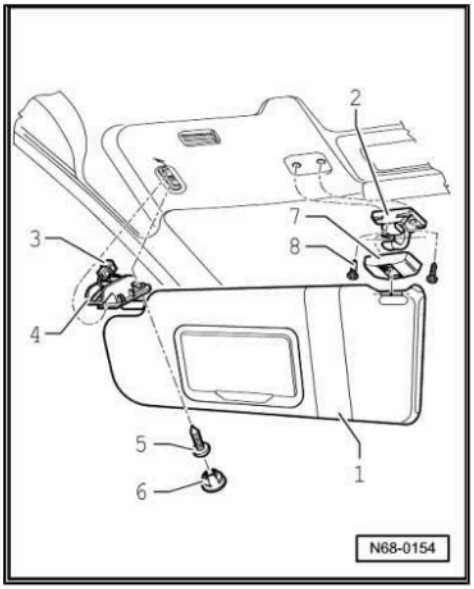

Interior lights, removing

- Pry out interior light -1- and disconnect connectors.

Reading lights with interior monitoring, removing

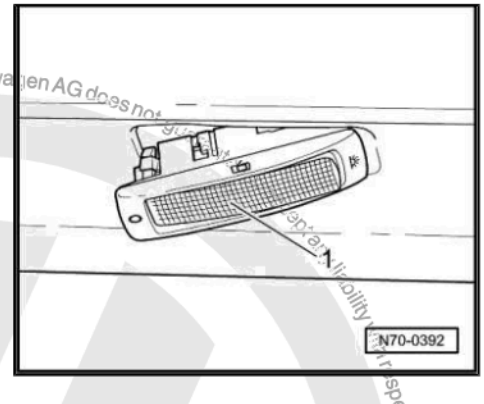

Protected by copyright. Copying for private or commercial purposes, in part or in whole, is not permitted unless authorised by Volkswagen AG. Volkswagen AG does not guarantee or accept any liability with respect to the correctness of information in this document. Copyright by Volkswagen AG.

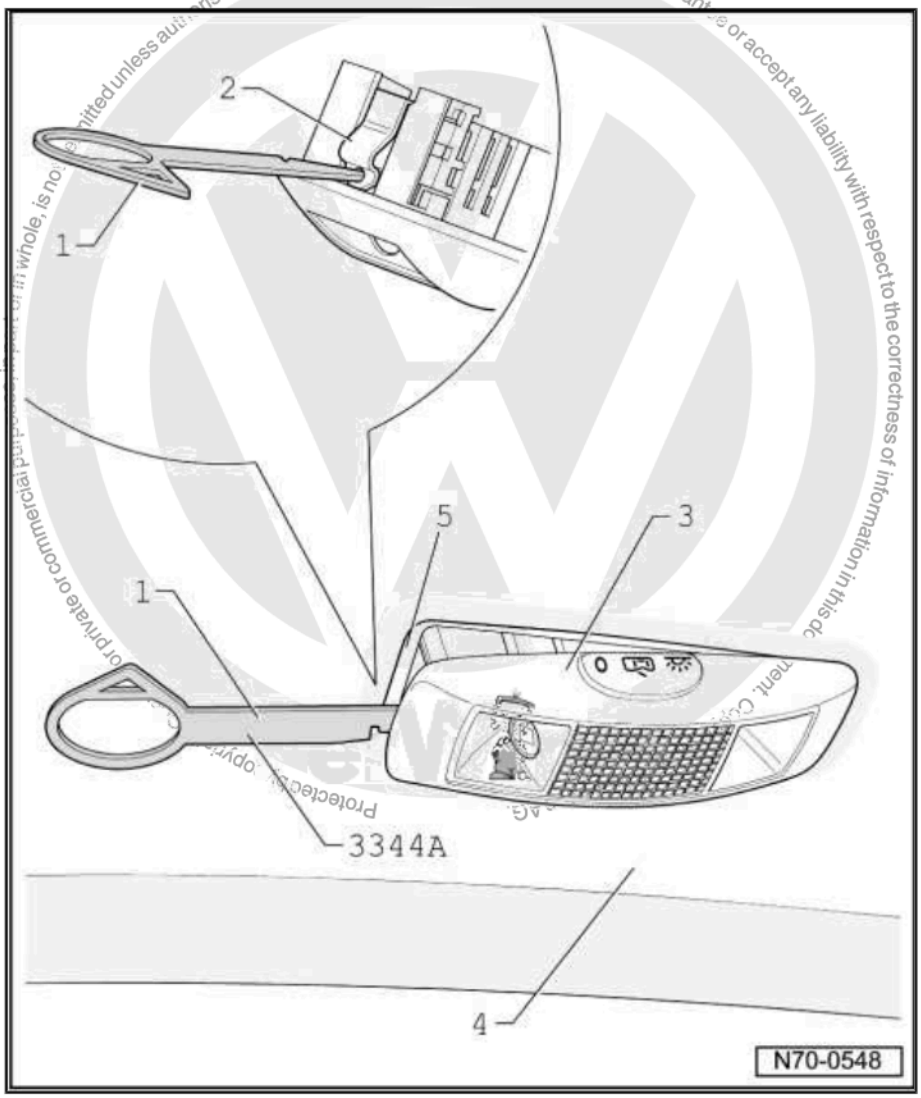

– Press spring in reading light -2- back with Release Tool - 3344A- -1-.

– Remove reading light -3- and disconnect harness connector.

Note

When operating spring -2-, ensure Release Tool - 3344A- -1- does not stick between headliner -4- and metal frame -5-.

1 - Sunroof Drive Cover Cap

2 - Headliner

– Slide headliner -2- back and pull forward and down -A arrows-.

– Slide headliner -2- toward front and lower -arrow B-.

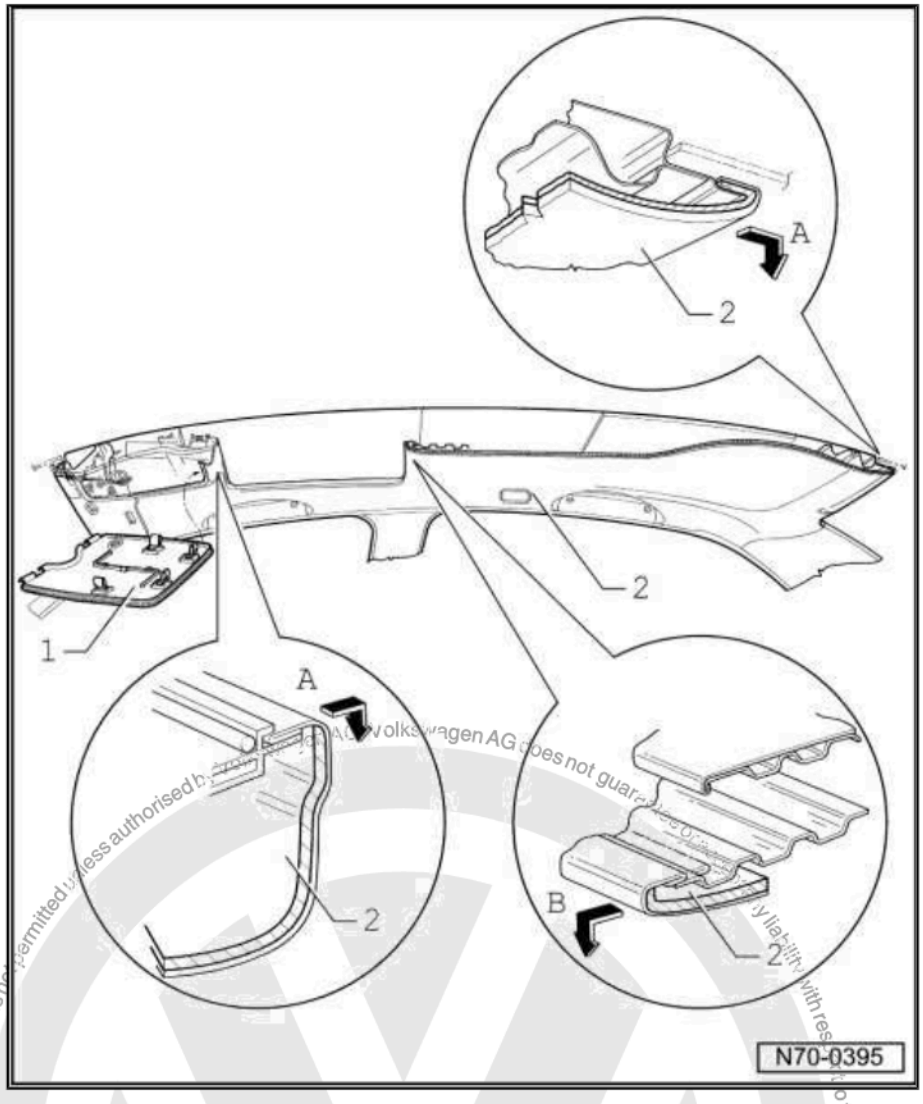

– Remove wiring harness -1- from lowered headliner -2-.

Installing

To install, perform the steps used in removal in reverse order.

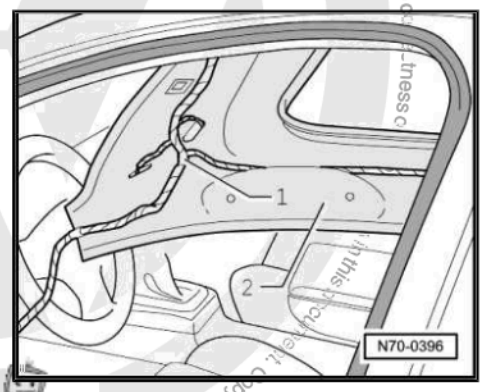

Note

When installing, wiring harness must be firmly bonded to headliner again. A standard adhesive gun can be used for bonding.

2.6 Molded Headliner with Sunroof, Wagon

Removing

Note

Due to equipment variations, small deviations must be considered during removal and installation.

– Switch off ignition.

Protected by copyright. Copying for private or commercial purposes, in part or in whole, is not permitted unless authorised by Volkswagen AG. Volkswagen AG does not guarantee or accept any liability with respect to the correctness of information in this publication. Copyright by Volkswagen AG.

– Remove upper A-pillars trim. Refer to
⇒ “2.3.1 Upper A-Pillar Trim”, page 112 .

– Removing upper C-pillars trim.

– Remove upper D-pillars trim.

– Unclip upper trim -1- on -B- pillar, first on sides then in upper area.

– The seat belt anchor -2- does not need to be removed.

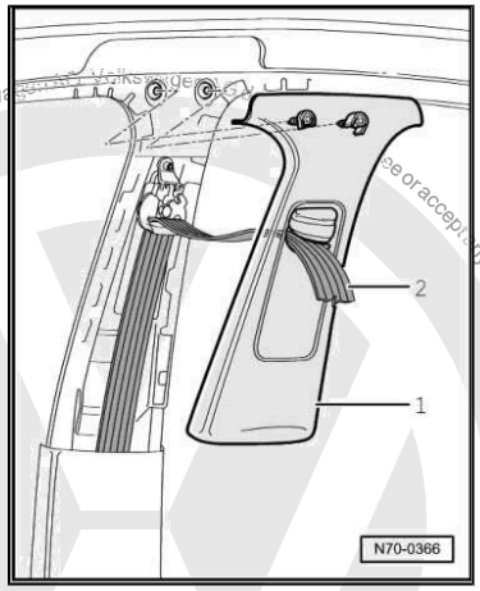

Remove grab handles

– Fold grab handle -1- downward.

– Pry up covers -2- using a screwdriver and fold upward.

– Remove the screws -3- and remove grab handle -1-.

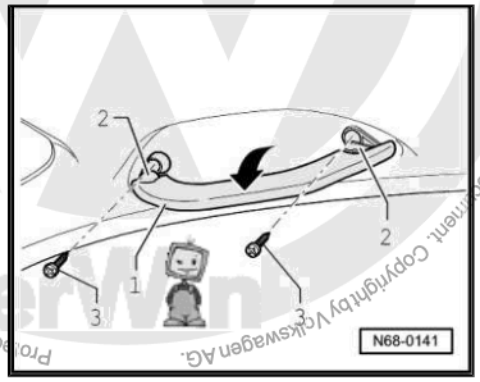

– Unclip trim -1- in direction of -arrow- and remove.

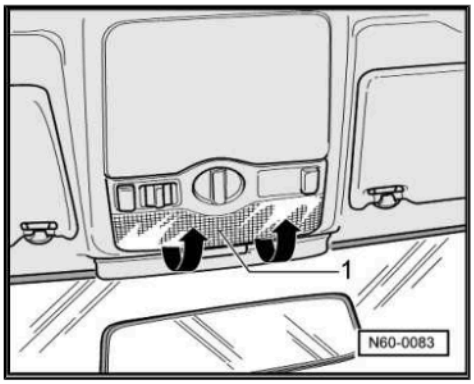

Protected by copyright. Copying for private or commercial purposes, in part or in whole, is not permitted unless authorised by Volkswagen AG. Copyright by Volkswagen AG. We do not give or accept any liability with respect to the correctness of information in this document.

– Remove the bolts -arrows- and remove automatic rotary switch.
– Unclip and disconnect harness connector.

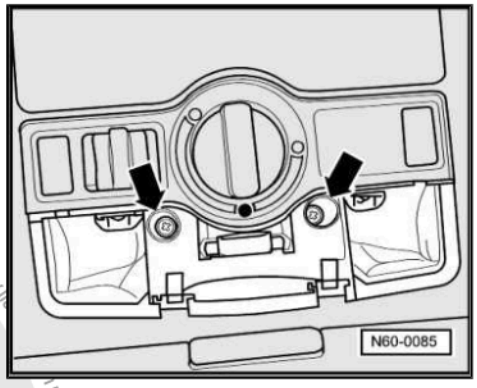

Remove visors

– Unhook sun visor -1- out of mount -2-.
– Pry off cap -6-.
– Remove the bolt -5-.
– Remove sun visor mount -4- from mounting and disconnect harness connector -3-.
– Pry off cap -7-.
– Remove two bolts -8- and remove mounting bracket -2-.

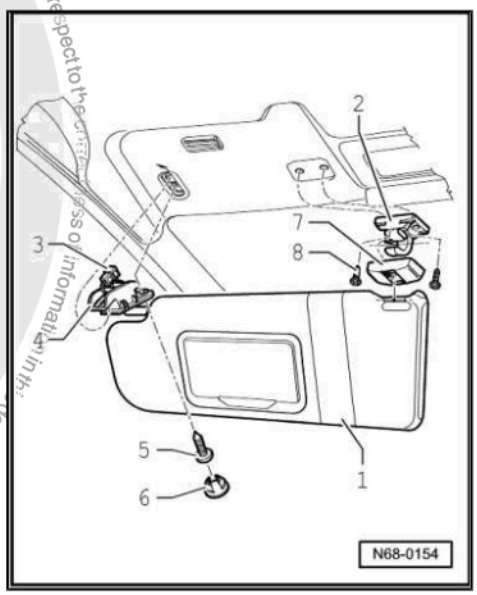

Interior lights, removing

– Pry out interior light -1- and disconnect connectors.

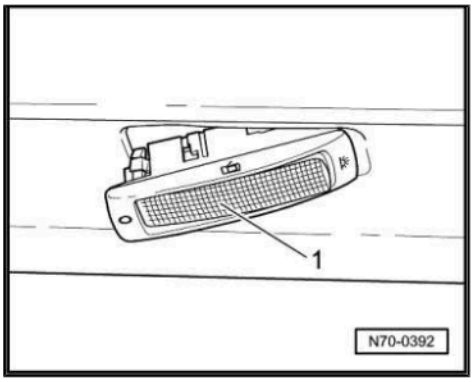

– Unclip cover strip -1-.

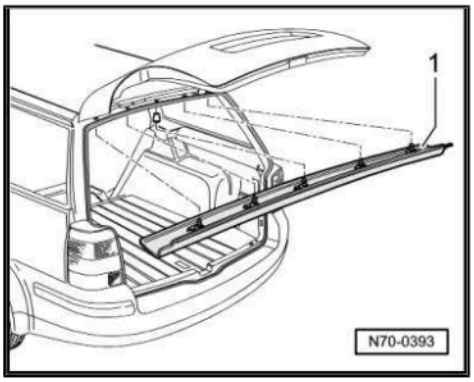

Protected by copyright. Copyright by Volkswagen AG. Volkswagen AG does not guarantee or accept any liability with respect to the correctness of information in this document. Copyright by Volkswagen AG. Copying for private or commercial purposes, in part or in whole, is not permitted unless authorised by Volkswagen AG.

1 - Sunroof Drive Cover Cap

2 - Headliner

– Slide headliner -2- back and pull forward and down -A arrows-.

– Slide headliner -2- toward front and lower -arrow B-.

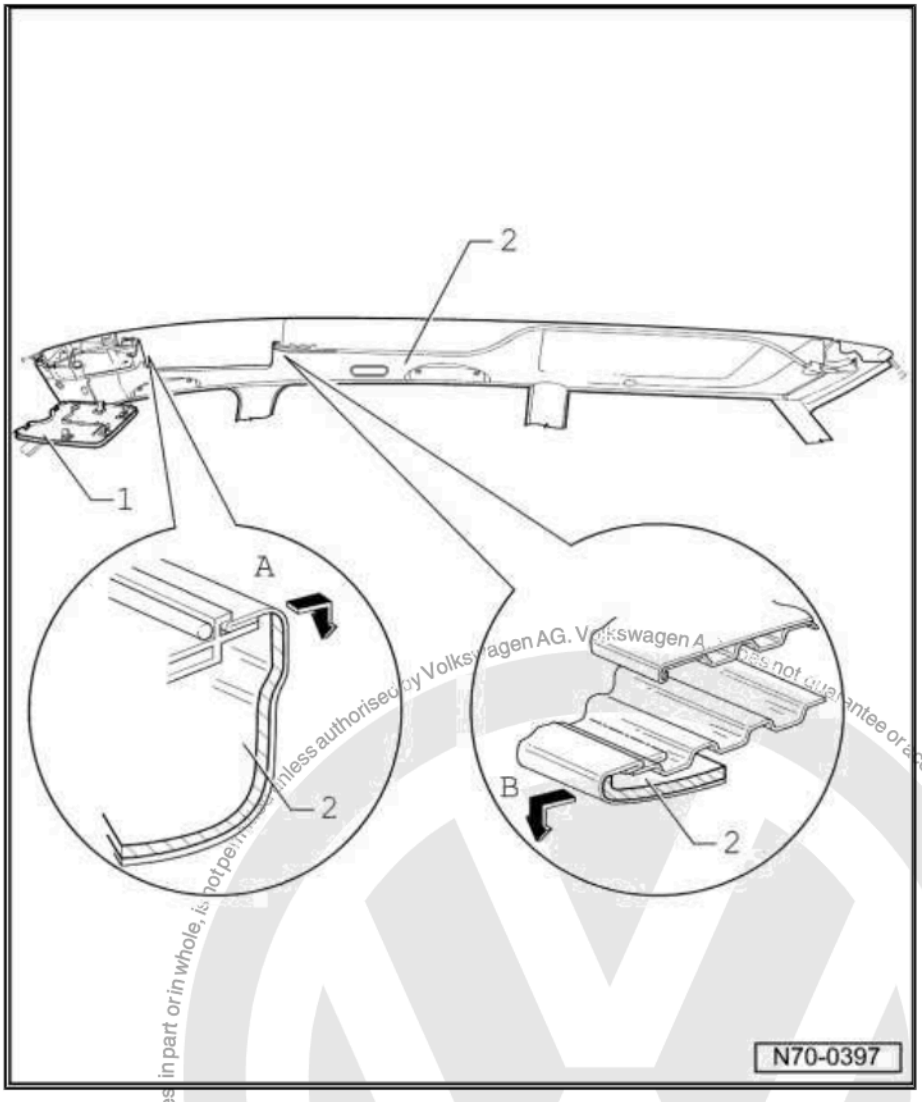

– Remove wiring harness -1- from lowered headliner -2-.

Installing

To install, perform the steps used in removal in reverse order.

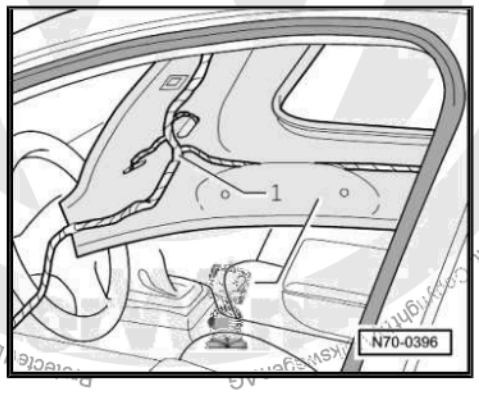

Note

When installing, wiring harness must be firmly bonded to headliner again. A standard adhesive gun can be used for bonding.

Protected by copyright. Copying for private or commercial purposes, in part or in whole, is not permitted unless authorised by Volkswagen AG. Volkswagen AG does not guarantee or accept any liability with respect to the correctness of information in this document. Copyright by Volkswagen AG.

3 Special Tools

Special tools and workshop equipment required

- Trim Release Lever - T10039-

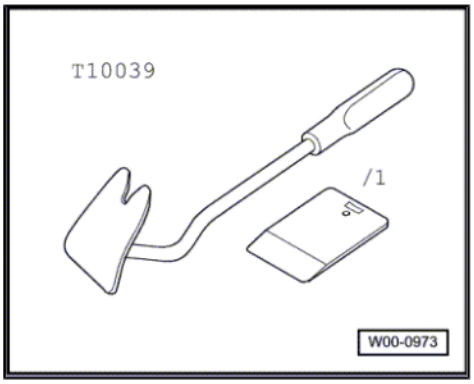

- Trim Release Lever - Wedge - T10039/1-
- Radio Removal Tool - 3316-

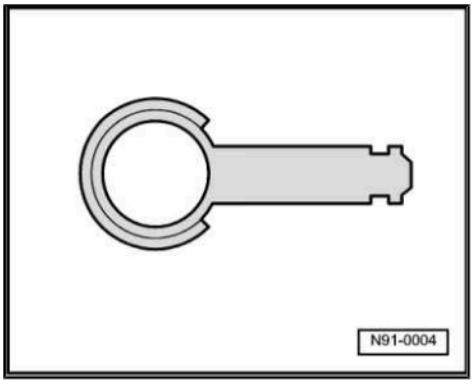

- Release Tool - 3344A-

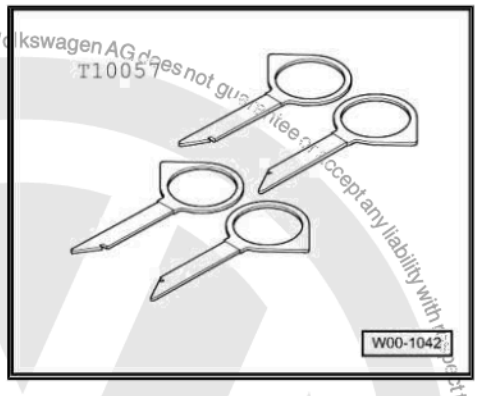

- Pry Lever - 80-200-

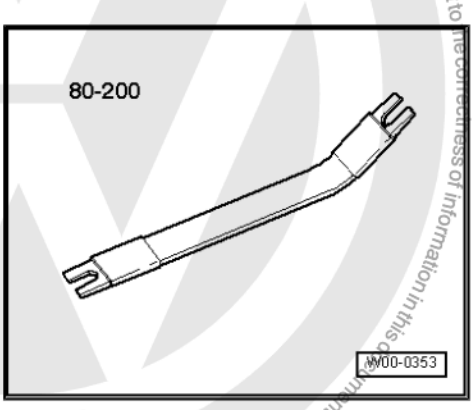

Protected by copyright. Copying for private or commercial purposes, in part or in whole, is not permitted unless authorised by Volkswagen AG. Volkswagen AG does not guarantee or accept any liability with respect to the correctness of information in this document. Copyright by Volkswagen AG.

72 – Seat Frames

1 Description and Operation

⇒ “1.1 Overview - Front Seat Backrest”, page 160

1.1 Overview - Front Seat Backrest

1 - Right Seat Trim
2 - Belt Latch
3 - Seat
4 - Backrest
5 - Collar
6 - Adjusting Knob (Lumbar Support)
7 - Left Seat Trim
8 - Adjusting Knob (Backrest)
9 - Adjusting Lever (Seat Height)
10 - Spreader Pin
11 - Bolt for Left Trim

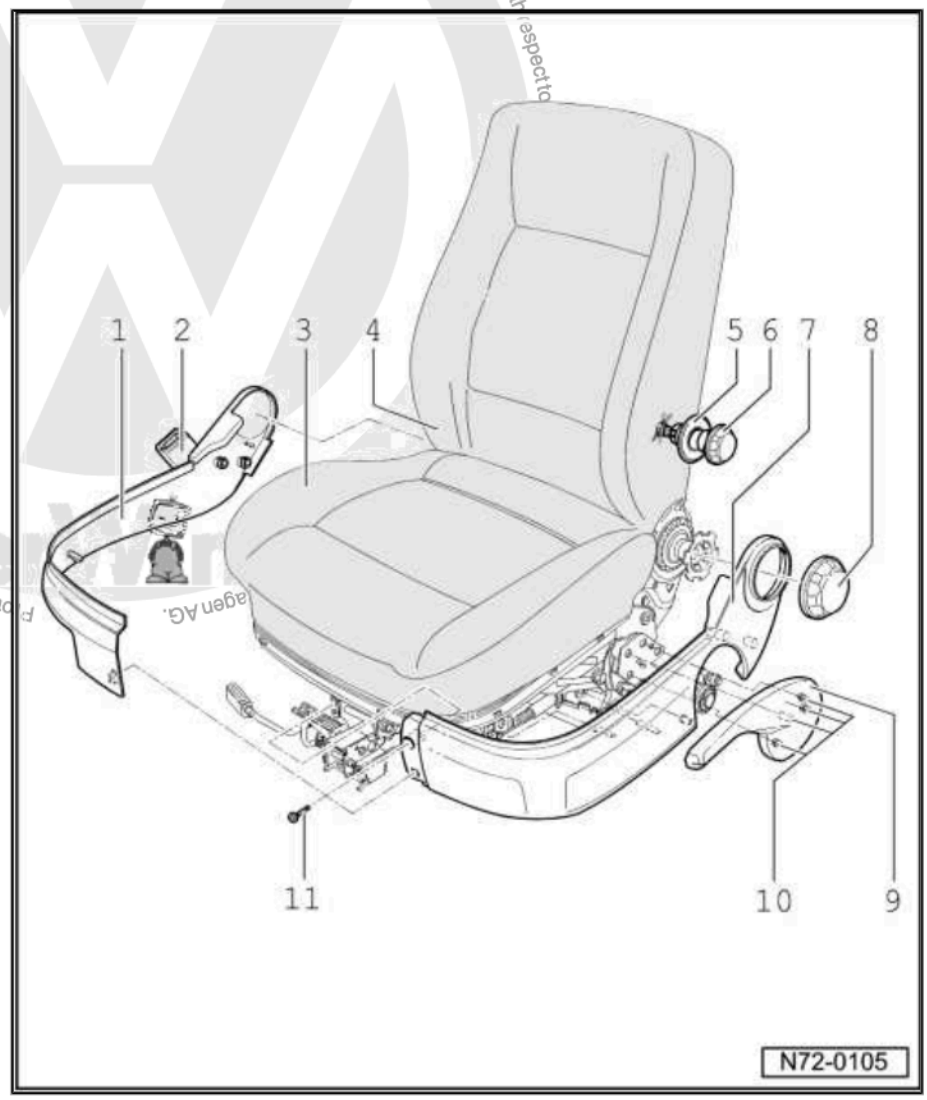

Protected by copyright. Copying for private or commercial purposes, in part or in whole, is not permitted unless authorised by Volkswagen AG. Volkswagen AG does not guarantee or accept any liability with respect to

2 Removal and Installation

⇒ “2.1 Front Seats”, page 161
⇒ “2.2 Recaro Seats, Front”, page 177
⇒ “2.3 Rear Seats”, page 198

2.1 Front Seats

⇒ “2.1.1 Front Seat”, page 161
⇒ “2.1.2 Front Backrest”, page 164
⇒ “2.1.3 Lumbar Support”, page 165
⇒ “2.1.4 8-Way Seat Trim”, page 169
⇒ “2.1.5 8-Way Seat Control Module”, page 170
⇒ “2.1.6 8-Way Seat Control Unit”, page 171
⇒ “2.1.7 8-Way Seat Surface Extension”, page 172
⇒ “2.1.8 8-Way Seat Height Adjustment Front Drive”, page 173
⇒ “2.1.9 8-Way Seat Height Adjustment Rear Drive”, page 174
⇒ “2.1.10 8-Way Seat Backrest Adjustment Drive”, page 175

2.1.1 Front Seat

Note

Removal and installation is described for the left-hand side of the vehicle. Removal and installation for the right-hand side is performed in the same manner.

Removing

WARNING

Observe safety precautions for working on airbags. Refer to ⇒ “1.1 Airbag Safety Precautions”, page 27 .

– Disconnect vehicle battery. Refer to⇒ Electrical Equipment; Rep. Gr. 27 ; Removal and Installation

Protected by copyright. Copying for private or commercial purposes, in part or in whole, is not permitted unless authorised by Volkswagen AG. Volkswagen AG does not guarantee or accept any liability with respect to the correctness of information in this document. Copyright by Volkswagen AG.

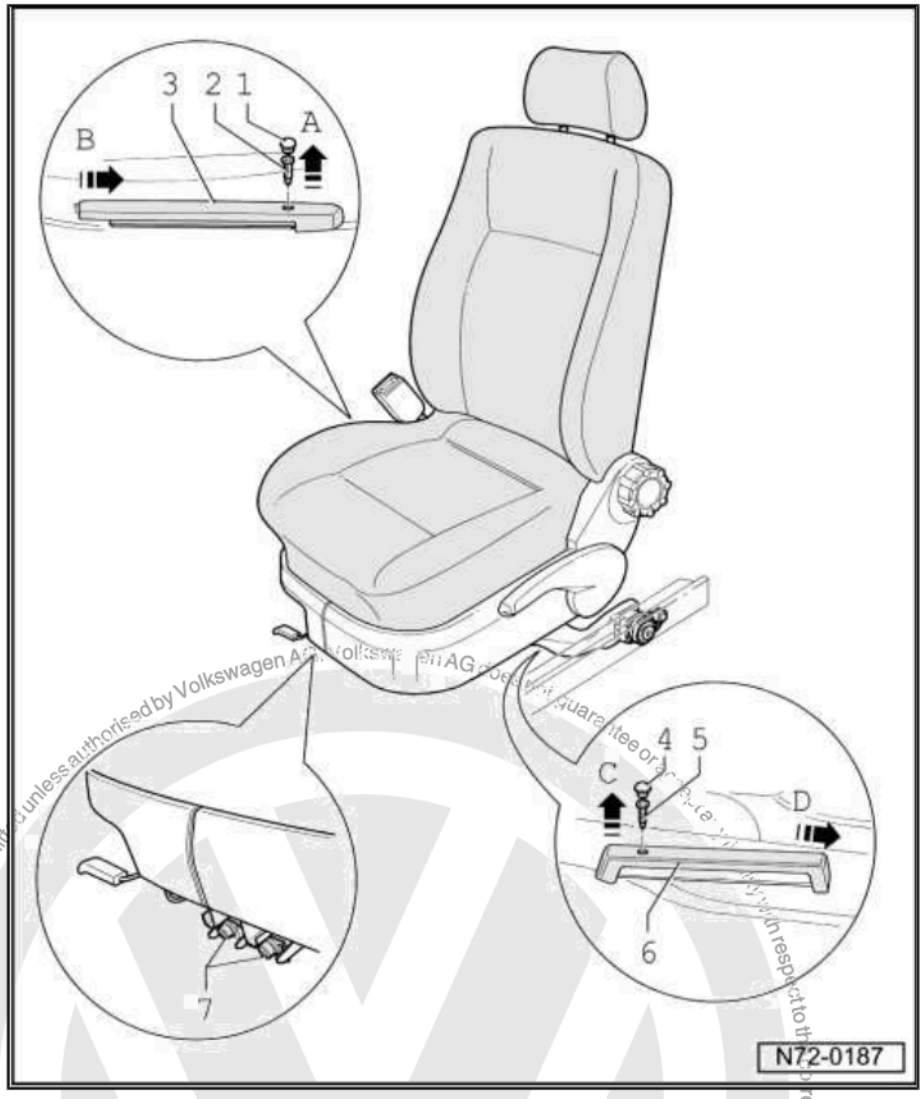

- Push seat forward.
- Unclip cover cap -1- from tunnel-side cover strip -3-, unscrew bolt -2-, unclip cover strip for seat rail -arrow A- and pull off -arrow B-.
- Unclip cover cap -4- from door sill-side cover strip -6-, unscrew bolt -5-, unclip cover strip for seat rail -arrow C- and pull off -arrow D-.
- Slide seat toward rear.
- Remove bolts -7- (23 Nm).
- Push seat back out of guide rail.

Protected by copyright. Copying for private or commercial purposes, in part or in whole, is not permitted unless authorised by Volkswagen AG. Copyright by Volkswagen AG. No guarantee or liability with respect to the correctness of information in this document.

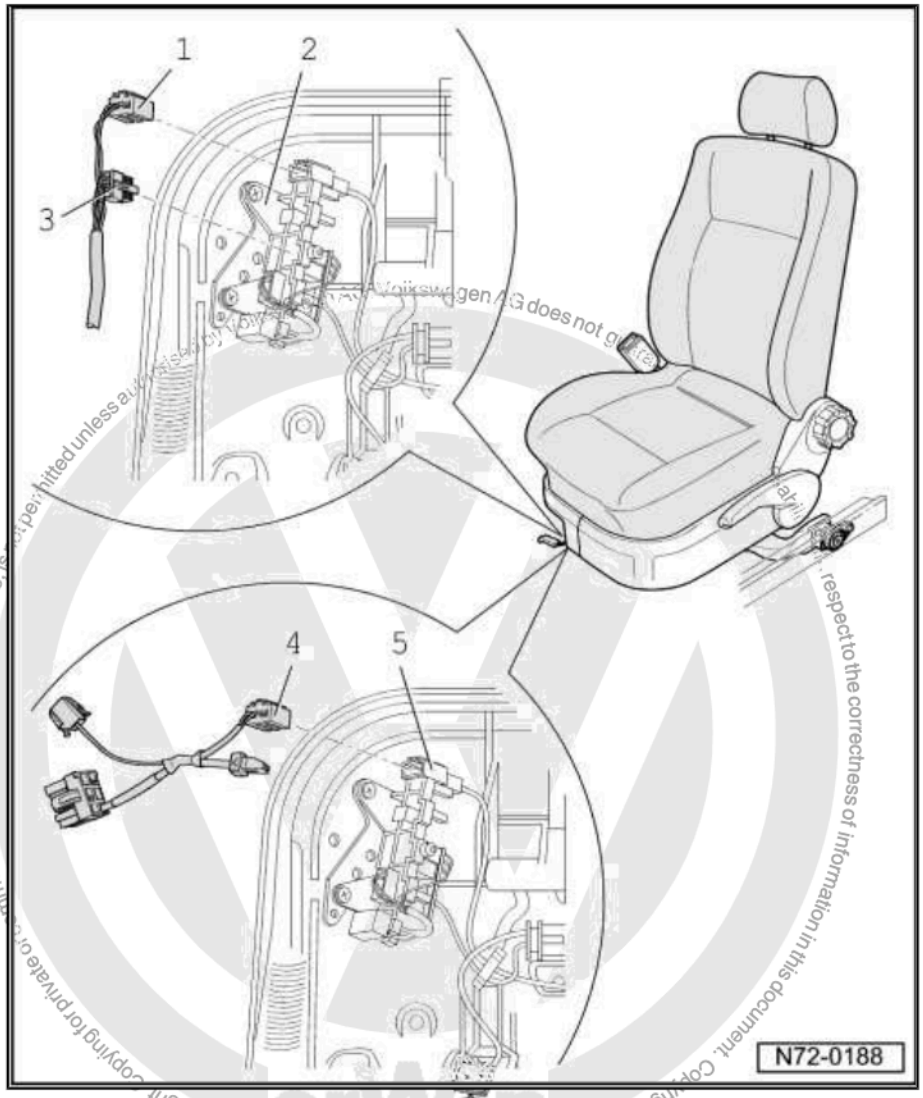

– Raise front of seat until wiring harness and coupling station under seat are accessible.

> ⚠ WARNING
>
> *Electrostatic discharges can lead to an unintended deployment of the airbag. Therefore the technician must discharge static electricity from the body before separating the ignition and ground wiring. This is done e.g. by briefly touching the body or the door striker or pin.*

– Disconnect wiring harness on side airbag -1- from coupling station -2-.

– If installed, disconnect connector for seat heater -3- from connector station.

– Connect connector Airbag Lockout Adapter - VAS5094- connector -4- to connector housing -5-.

– If Airbag Lockout Adapter - VAS5094- does not fit in connector housing, Airbag Lockout Adapter - VAS5232/1- must be used.

Installing

– To install, perform the steps used for removal in reverse order.

– Switch on ignition.

> ⚠ WARNING
>
> *Make sure that no one is in the vehicle.*

– Connect vehicle battery. Refer to ⇒ Electrical Equipment; Rep. Gr. 27 ; Removal and Installation .

2.1.2 Front Backrest

Removing

– Remove seat.

Assembly Overview. Refer to
⇒ “1.1 Overview - Front Seat Backrest”, page 160 .

– Remove belt buckle. Refer to ⇒ “4.1.1 Belt Buckle”, page 56

Copyright by Volkswagen AG. Volkswagen AG does not guarantee or accept any liability with respect to the correctness of information in this copy. Copying for private or commercial purposes, in part or in whole, is not permitted unless authorised by Volkswagen AG.

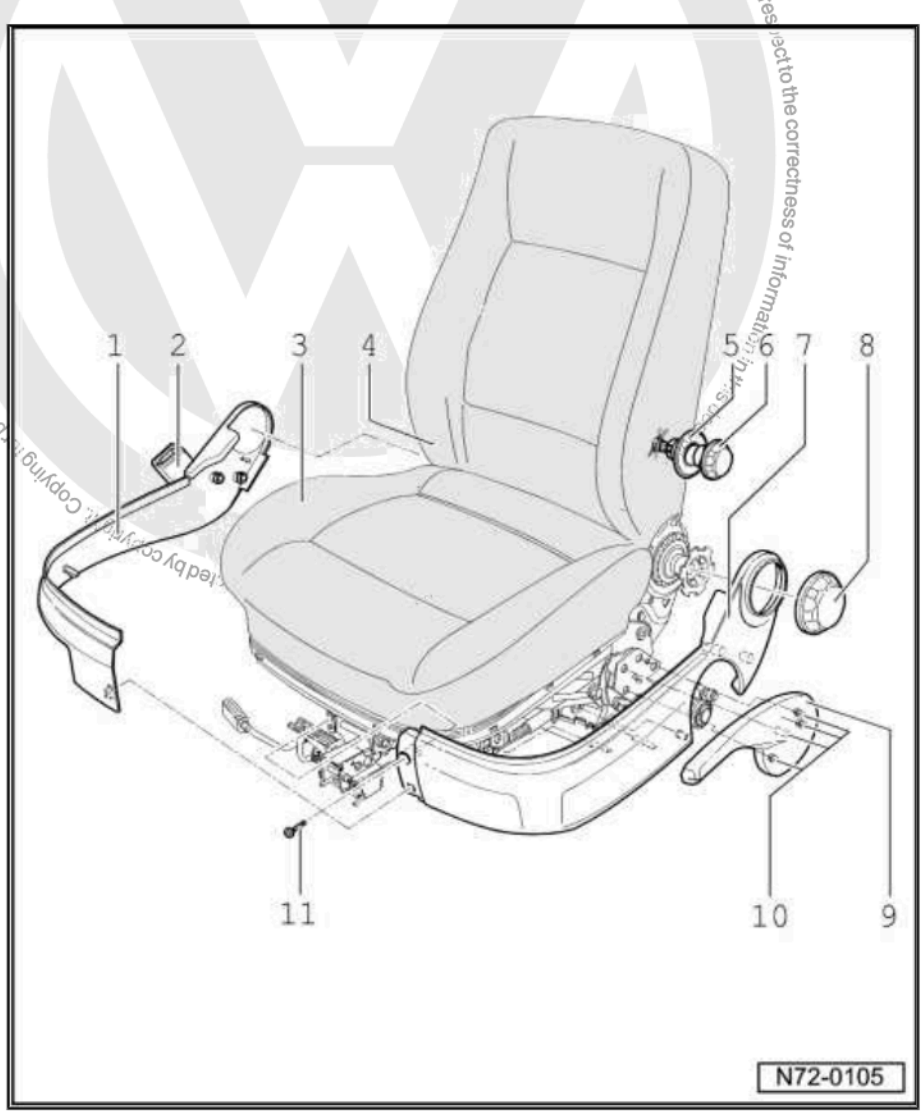

– Pull off adjusting knob -8-.

– Press four spreader pins -10- on adjusting lever -9- inward and remove adjusting lever.

– Remove trim -1-.
– Remove the bolt -11-.
– Remove trim -7-.
– Disconnect harness connector -1- for backrest heater.

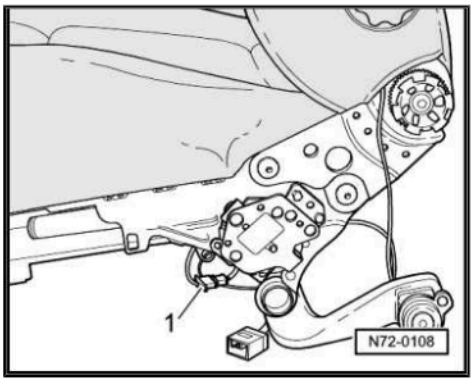

– Remove fitting bolts -1- on both sides of seat and remove backrest.

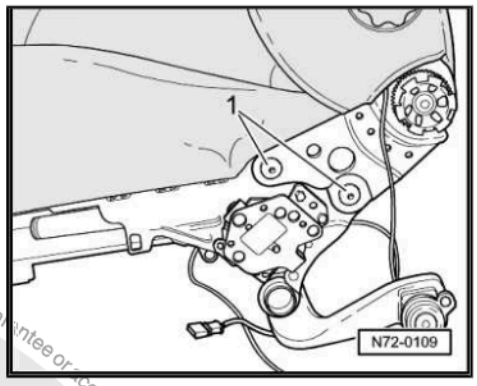

Installing

To install, perform the steps used in removal in reverse order.

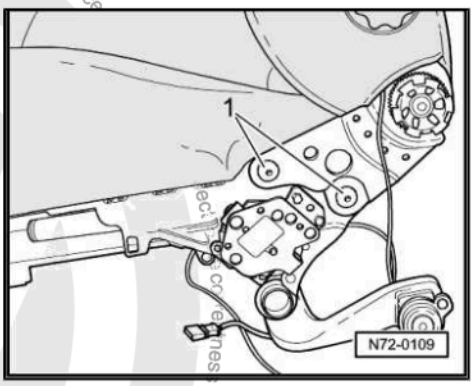

Note

Fitting bolts -1- must be secured with fluid locking compound D 000 600 A2 (tightening specification 20 Nm).

2.1.3 Lumbar Support

Removing

– Remove seat.
– Remove backrest. Refer to ⇒ “2.1.2 Front Backrest”, page 164 .

Protected by copyright. Copying for private or commercial purposes, in part or in whole, is not permitted unless authorised by Volkswagen AG. Volkswagen AG does not guarantee or accept any liability with respect to the correctness of information in this document. Copyright by Volkswagen AG.

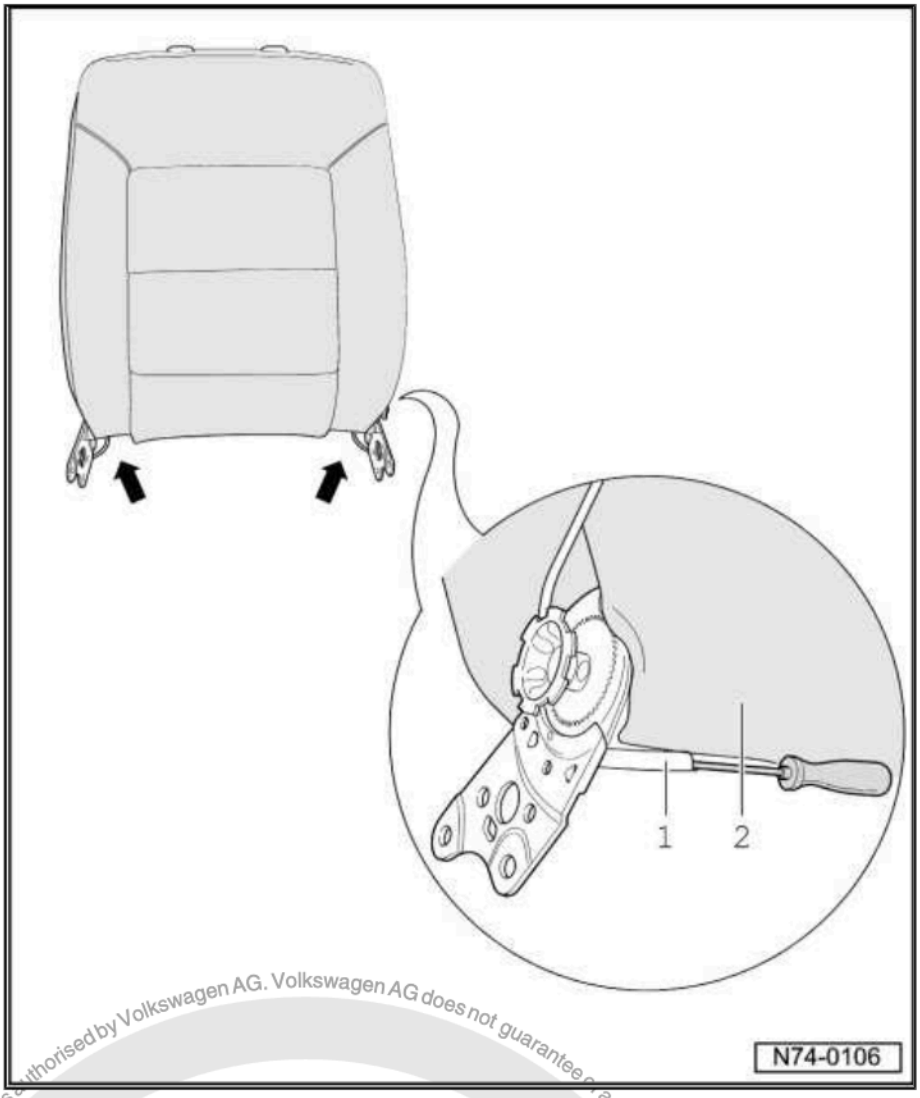

– Separate beading strip -1- for cover -2- using a screwdriver -arrows-.

Protected by copyright. Copying for private or commercial purposes, in part or in whole, is not permitted unless authorised by Volkswagen AG. Volkswagen AG does not guarantee or accept any liability with respect to the correctness of information in this document. Copyright by Volkswagen AG.

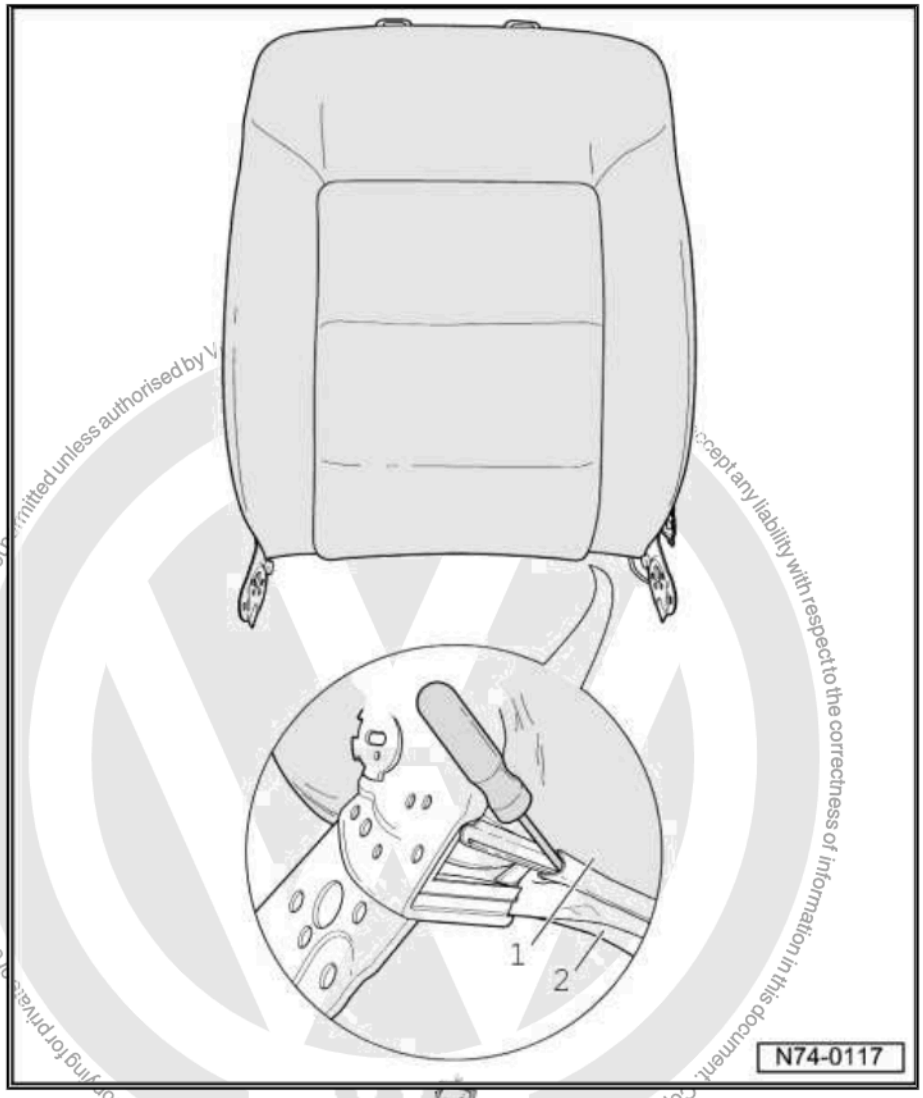

Protected by copyright. Copying for private or commercial purposes, in part or in whole, is not permitted unless authorised by Volkswagen AG. Copyright by Volkswagen AG. Accept any liability with respect to the correctness of information in this document.

– Loosen rear cover -1- from front cover -2-.
– Disconnect harness connector -1- for backrest heater.

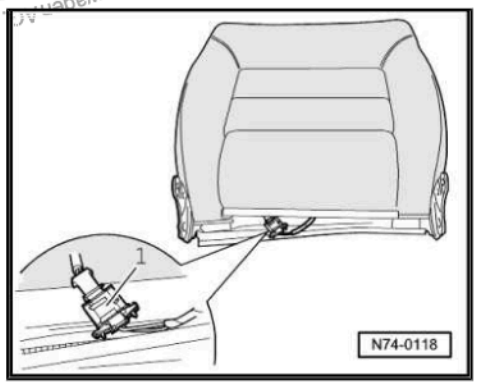

Protected by copyright. Copying for private or commercial purposes, in part or in whole, is not permitted unless authorised by Volkswagen AG. Volkswagen AG does not guarantee or accept any liability with respect to the correctness of information in this document.

– Remove tensioning wire -1- from seat frame -2-.

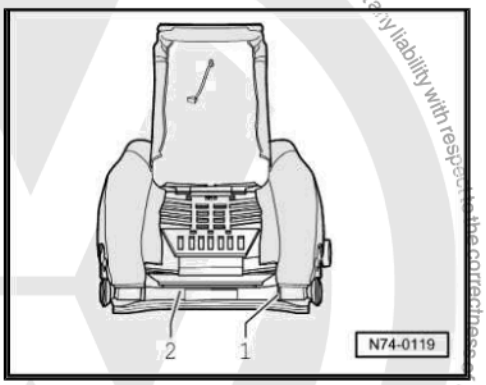

– Cut through three cushion clips -1-.

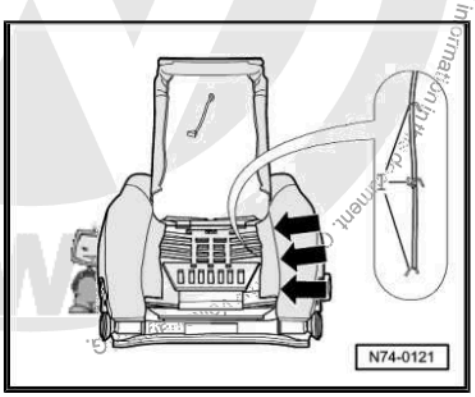

– Pry out adjustment knob -1- and collar -2-.

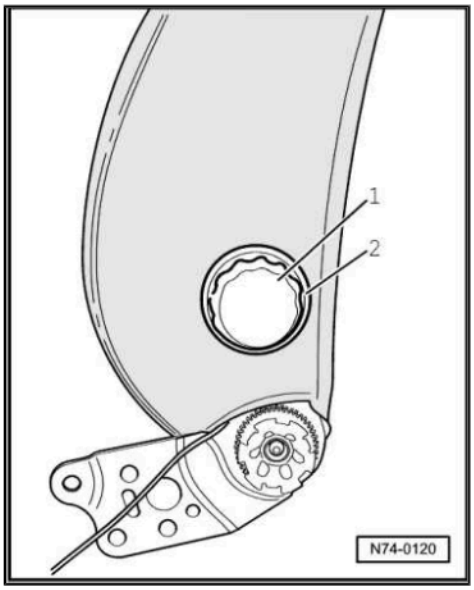

– Slide the cover -1- up and unscrew bolts -2- for lumbar adjustment -3-.

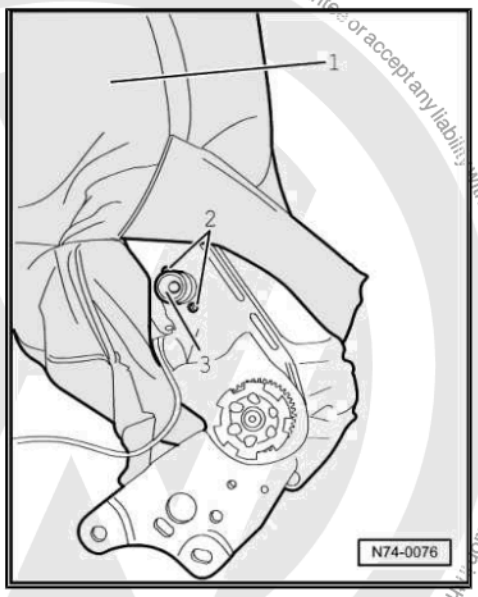

– Unclip lumbar support -1- -arrows- and remove from backrest frame.

Installing

To install, perform the steps used in removal in reverse order.

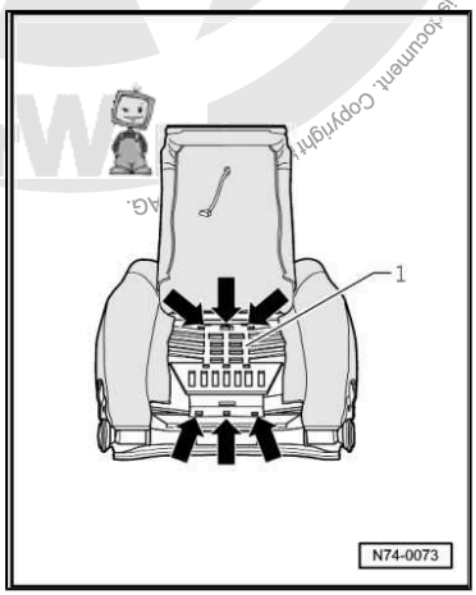

2.1.4 8-Way Seat Trim

– Remove seat.

– Remove seat belt latch.

Protected by copyright. Copying for private or commercial purposes, in part or in whole, is not permitted unless authorised by Volkswagen AG. Volkswagen AG does not guarantee or accept any liability with respect to the correctness of information in this document. Copyright by Volkswagen AG.

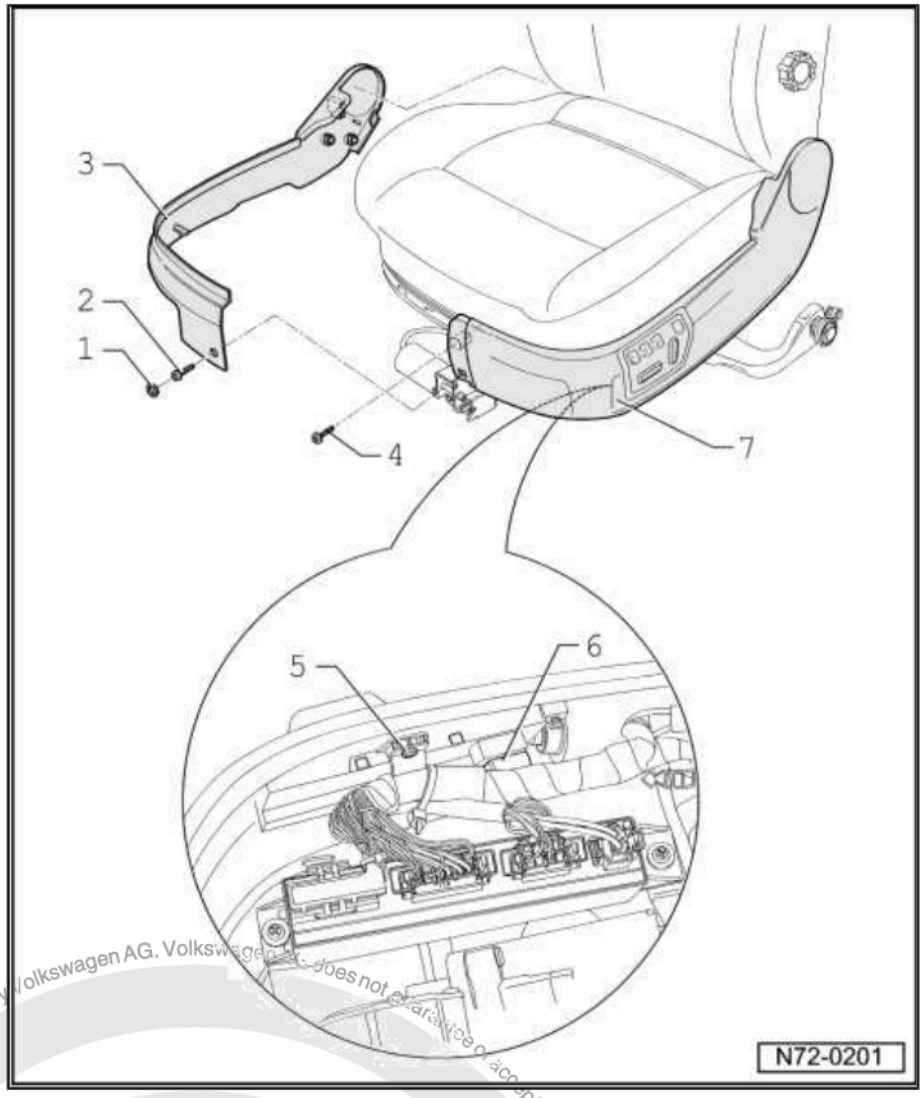

– Unclip cover cap -1- and remove screw -2-.
– Unclip right seat trim -3-.
– Remove bolts -4- and -5-.
– Disconnect harness connector -6-.
– Unclip left seat trim -7-.

2.1.5 8-Way Seat Control Module

Note

Control module is installed under the drivers' seat.

– Remove seat.

Protected by copyright. Copying for private or commercial purposes, in part or in whole, is not permitted unless authorised by Volkswagen AG. Volkswagen AG does not guarantee or accept any liability with respect to the correctness of information in this document. Copyright by Volkswagen AG.

Protected by copyright. Copying for private or commercial purposes, in part or in whole, is not permitted unless authorised by Volkswagen AG. Volkswagen AG does not guarantee or accept any liability with respect to the correctness of information in this document. Copyright by Volkswagen AG.

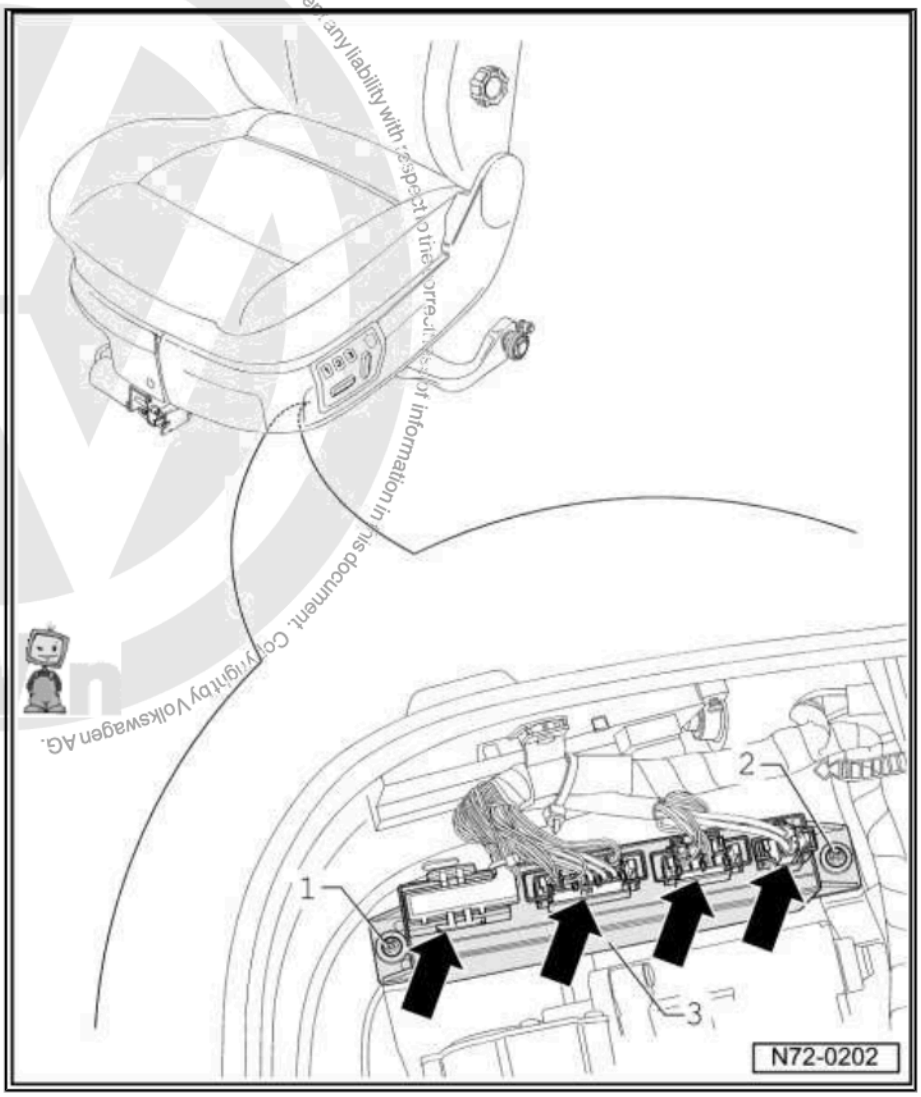

- Disconnect four harness connectors -arrows-.
- Remove the bolts -1- and -2-.
- Remove control module -3-.

2.1.6 8-Way Seat Control Unit

- Remove seat.
- Remove belt buckle. Refer to ⇒ “4.1.1 Belt Buckle”, page 56
- Remove 8-way seat trim. Refer to ⇒ “2.1.4 8-Way Seat Trim”, page 169 .

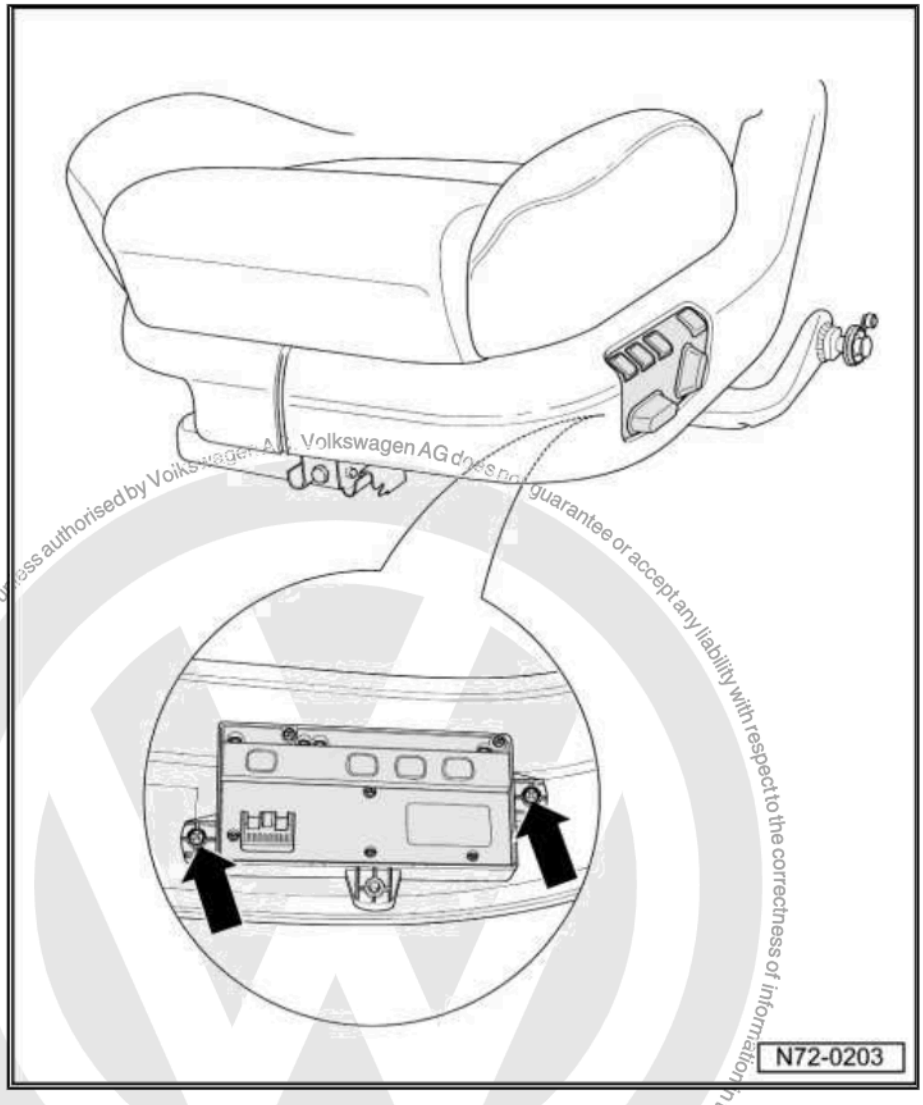

– Remove the two bolts -arrows- at interior of left seat trim and remove switch unit.

2.1.7 8-Way Seat Surface Extension

– Remove seat.

Protected by copyright. Copying for private or commercial purposes, in part or in whole, is not permitted unless authorised by Volkswagen AG. Volkswagen AG does not guarantee or accept any liability with respect to the correctness of information in this document. Copyright by Volkswagen AG.

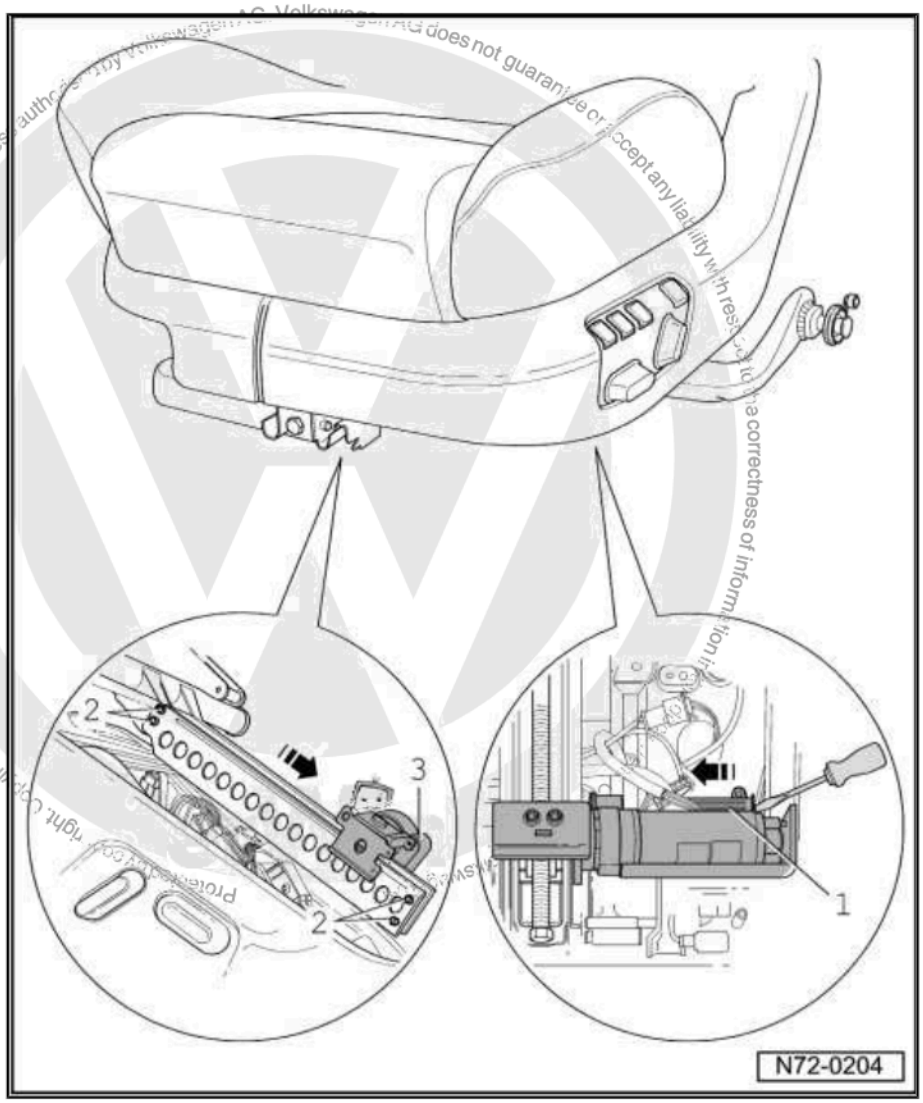

- Using a screwdriver, disconnect harness connector -1- in direction of -arrow-.
- Remove the eight bolts -2- (four on each side).
- Remove seat longitudinal adjustment -3- in direction of -arrow-.

2.1.8 8-Way Seat Height Adjustment Front Drive

- Remove seat.

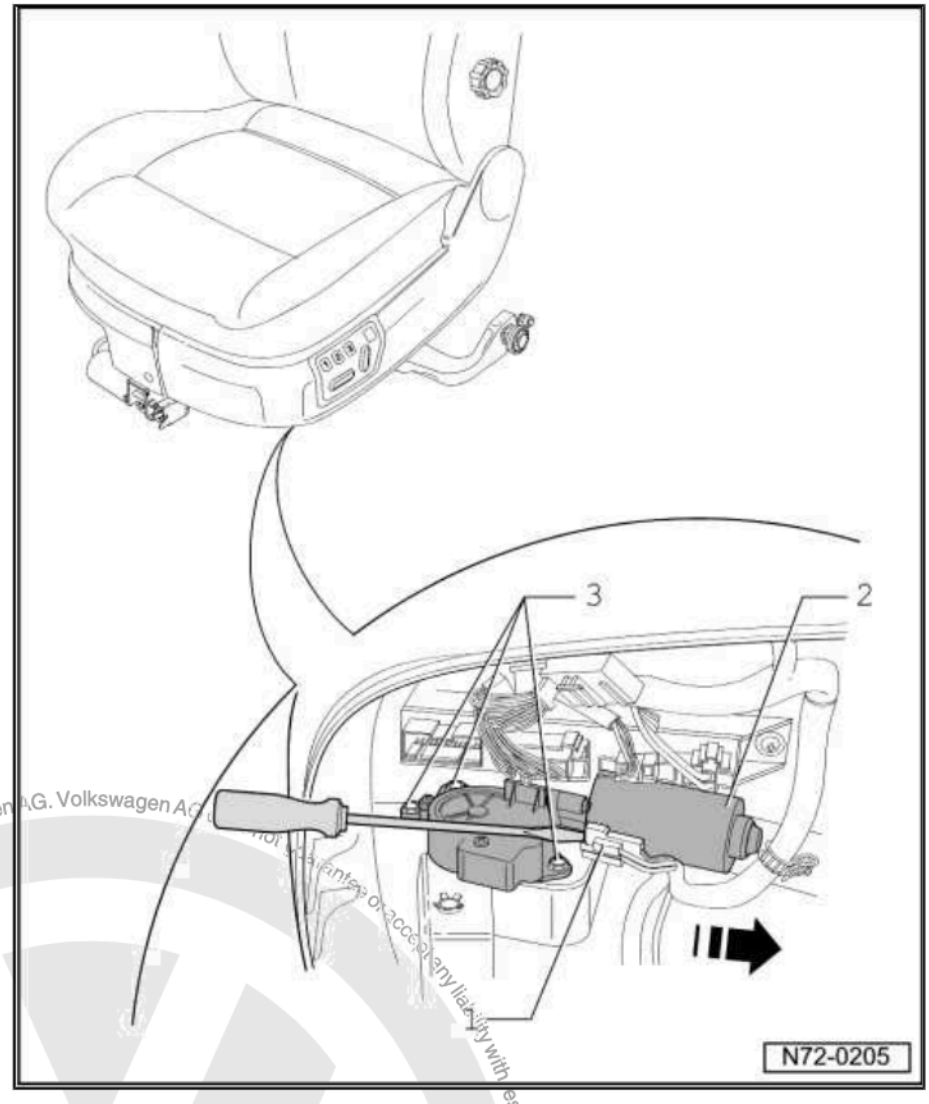

- Using a screwdriver, disconnect harness connector -1- in direction of -arrow-.
- Remove three bolts -3-.
- Remove front drive -2-.

2.1.9 8-Way Seat Height Adjustment Rear Drive

- Bring seat to the uppermost position.
- Remove seat.
- Remove belt buckle. Refer to ⇒ “4.1.1 Belt Buckle”, page 56
- Remove 8-way seat trim. Refer to ⇒ “2.1.4 8-Way Seat Trim”, page 169 .

Protected by copyright. Copyright by Volkswagen AG. Volkswagen AG does not accept any liability with respect to the correctness of information in this document. Copyright by Volkswagen AG. Reproduction, in whole or in part, is not permitted unless authorised by Volkswagen AG. Volkswagen AG does not accept any liability with respect to the correctness of information in this document. Copyright by Volkswagen AG. Reproduction, in whole or in part, is not permitted unless authorised by Volkswagen AG. Volkswagen AG does not accept any liability with respect to the correctness of information in this document. Copyright by Volkswagen AG.

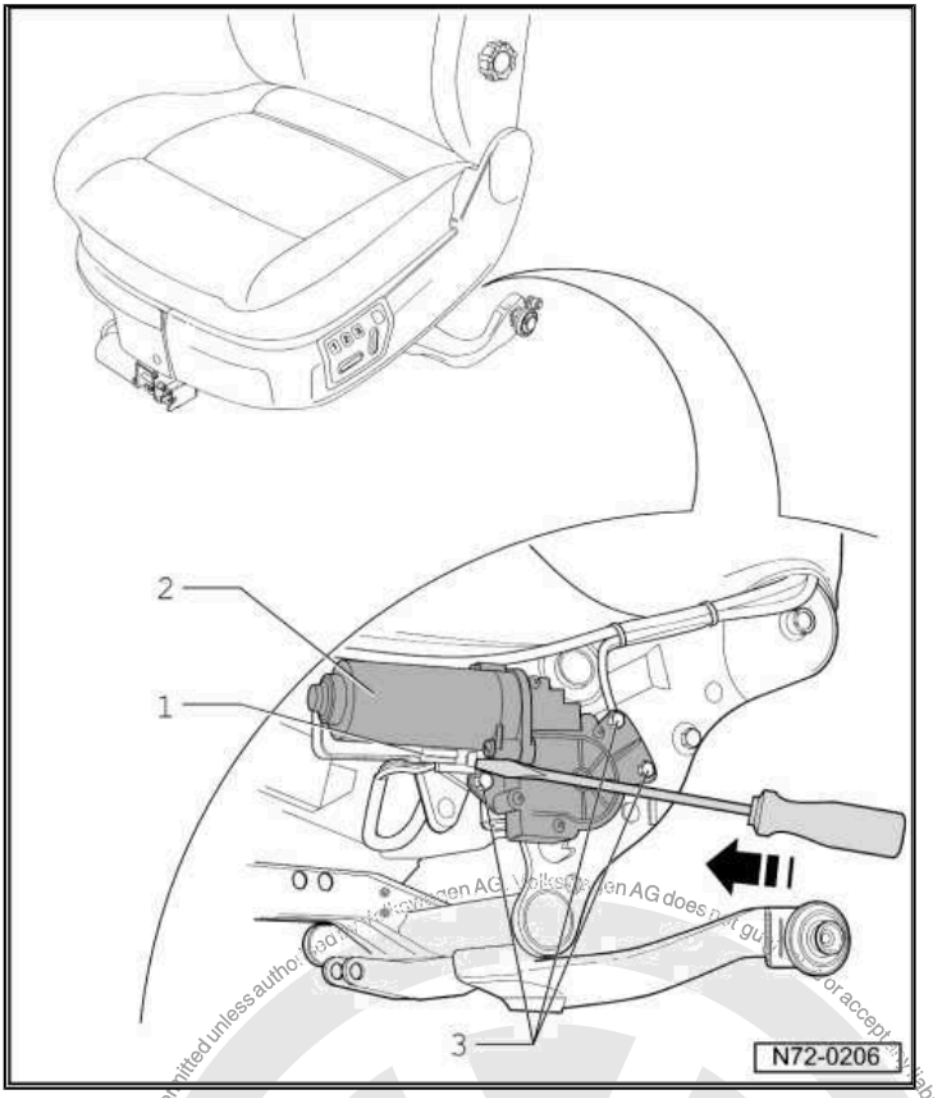

- Using a screwdriver, disconnect harness connector -1- in direction of -arrow-.
- Remove three bolts -3-.
- Remove rear drive -2-.

2.1.10 8-Way Seat Backrest Adjustment Drive

- Remove seat.
- Remove belt buckle. Refer to ⇒ “4.1.1 Belt Buckle”, page 56
- Remove 8-way seat trim. Refer to ⇒ “2.1.4 8-Way Seat Trim”, page 169 .
- Remove cover in lower area of backrest and roll up. Refer to ⇒ “1.1.2 Front Backrest Cover and Cushion”, page 231 .

Protected by copyright. Copying for private or commercial purposes, in part or in whole, is not permitted unless authorised. Copyright by Volkswagen AG. Volkswagen AG does not guarantee or accept any liability with respect to the correctness of information in this document.

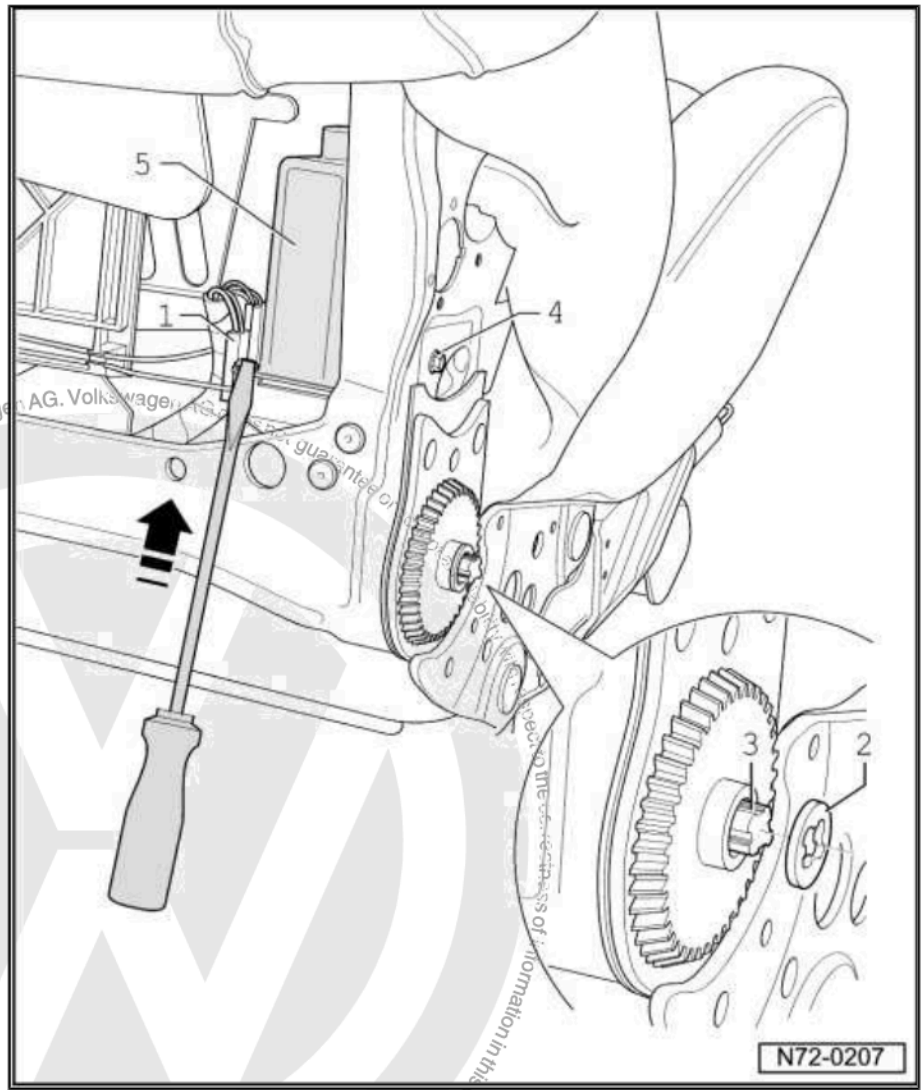

Protected by copyright. Copying for private or commercial purposes, in part or in whole, is not permitted unless authorised by Volkswagen AG. Volkswagen AG does not guarantee or accept any liability with respect to the correctness of information in this document. Copyright by Volkswagen AG.

– Using a screwdriver, disconnect harness connector -1- in direction of -arrow-.
– Pry out locking washer -2- from shaft -3- using a screwdriver.
– Drive the shaft -3- approximately 15 cm into backrest frame using hammer and drift.
– Remove the nut -4-.
– Remove drive -5-.

2.2 Recaro Seats, Front

⇒ “2.2.1 Recaro Seats”, page 177
⇒ “2.2.2 Backrest Hinge Trim”, page 179
⇒ “2.2.3 Seat Cushion Extension”, page 181
⇒ “2.2.4 Spring Cover”, page 183
⇒ “2.2.5 Seat Area”, page 184
⇒ “2.2.6 Seat Side Trim”, page 186
⇒ “2.2.7 Backrest”, page 187
⇒ “2.2.8 Back Shell”, page 189
⇒ “2.2.9 2-Way Lumbar Support”, page 190
⇒ “2.2.10 2-Way Lumbar Support Motor with Gears”, page 191
⇒ “2.2.11 Seat Height Adjustment Motor”, page 193
⇒ “2.2.12 Backrest Motor with Gears”, page 195
⇒ “2.2.13 Switch Unit”, page 197

2.2.1 Recaro Seats

Note

Removal and installation is described for the left-hand side of the vehicle. Removal and installation for the right-hand side is performed in the same manner.

Removing

WARNING

Observe safety precautions for working on airbags. Refer to ⇒ “1.1 Airbag Safety Precautions”, page 27 .

Protected by copyright. Copying for private or commercial purposes, in part or in whole, is not permitted unless authorised by Volkswagen AG. Volkswagen AG does not guarantee or accept any liability with respect to the correctness of information in this document. Copyright by Volkswagen AG.

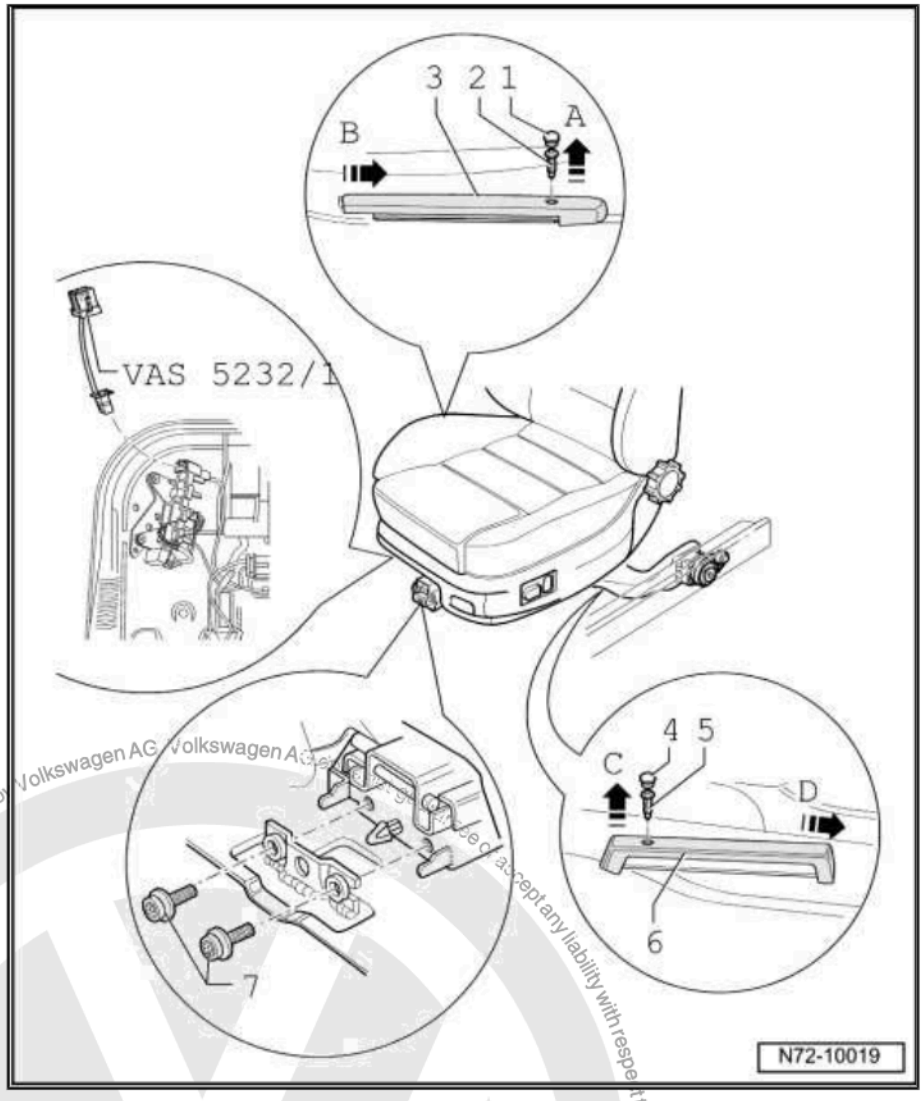

- Using electric seat adjustment, place Recaro seat as far forward as possible.
- Unclip cover cap -1- from tunnel-side cover strip -3-, unscrew bolt -2-, unclip cover strip for seat rail -arrow A- and pull off -arrow B-.
- Unclip cover cap -4- from door sill-side cover strip -6-, unscrew bolt -5-, unclip cover strip for seat rail -arrow C- and pull off -arrow D-.
- Using electric seat adjustment, place Recaro seat as far back as possible.
- Disconnect vehicle battery. Refer to⇒ Electrical Equipment; Rep. Gr. 27 ; Removal and Installation
- Remove bolts -7- (23 Nm).
- Slide Recaro seat back out of guide rail.
- Raise front of Recaro seat until wiring harness and coupling station under seat are accessible.

Copyright by Volkswagen AG. Reproduced by copyright. Copying for private or commercial purposes, in part or in whole, is not permitted unless authorised by Volkswagen AG. Volkswagen AG does not guarantee or accept any liability with respect to the correctness of information in this document.

> ⚠ WARNING
>
> *Electrostatic discharges can lead to an unintended deployment of the airbag. Therefore the technician must discharge static electricity from the body before separating the ignition and ground wiring. This is done e.g. by briefly touching the body or the door striker or pin.*

– Disconnect wiring harnesses from coupling station.

– Place Airbag Lockout Adapter - VAS5232/1- in side airbag connector housing.

– Remove Recaro seat from vehicle.

Installing

– To install, perform the steps used for removal in reverse order.

– Switch on ignition.

> ⚠ WARNING
>
> *Make sure that no one is in the vehicle.*

– Connect vehicle battery. Refer to ⇒ Electrical Equipment; Rep. Gr. 27 ; Removal and Installation .

2.2.2 Backrest Hinge Trim

Removing

– Remove Recaro seat. Refer to ⇒ “2.2.1 Recaro Seats”, page 177

Protected by copyright. Copying for private or commercial purposes, in part or in whole, is not permitted unless authorised by Volkswagen AG. Volkswagen AG does not guarantee or accept any liability with respect to the correctness of information in this document. Copyright by Volkswagen AG.

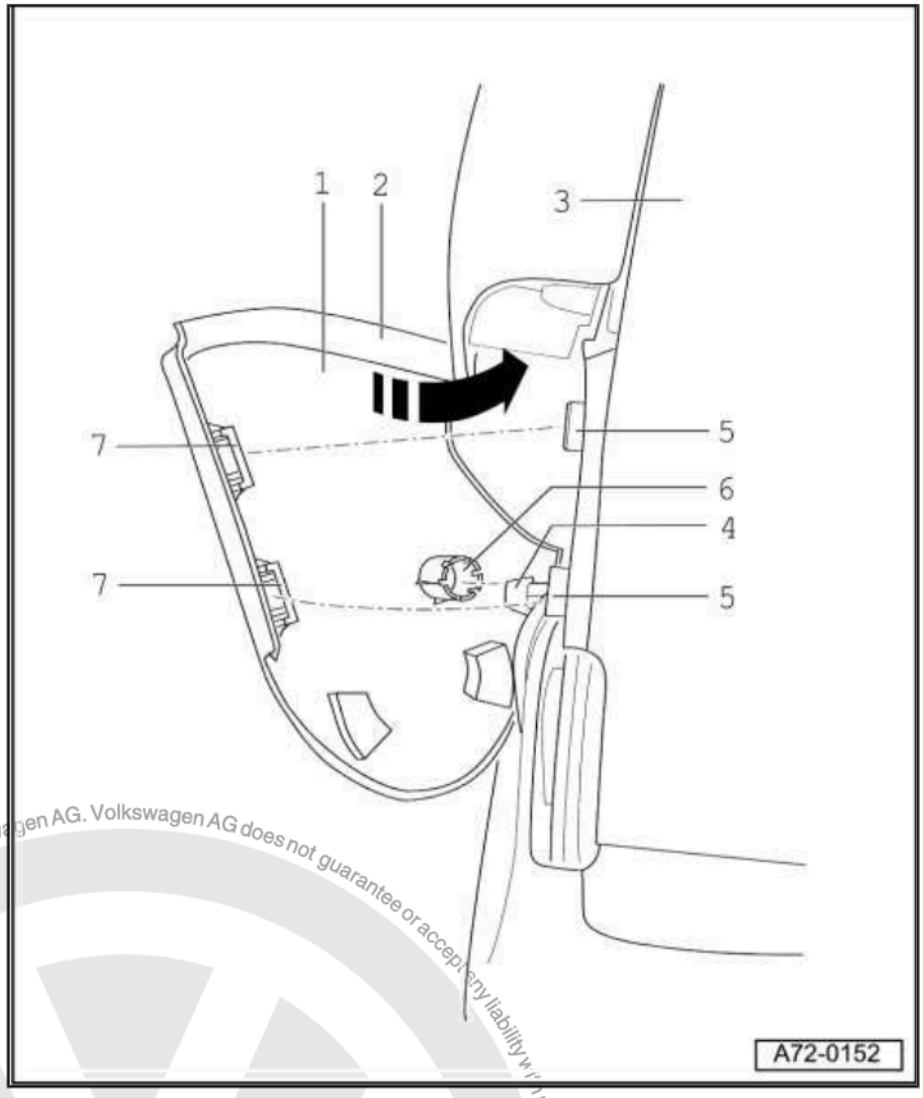

– Loosen trim in lower area from catches -4- and -5-.
– Remove trim -1- outward.

Installing

Protected by copyright. Copying for private or commercial purposes, partly or in whole, is not permitted unless authorised by Volkswagen AG. Volkswagen AG does not guarantee or accept any liability with respect to the correctness of information in this document. Copyright by Volkswagen AG.

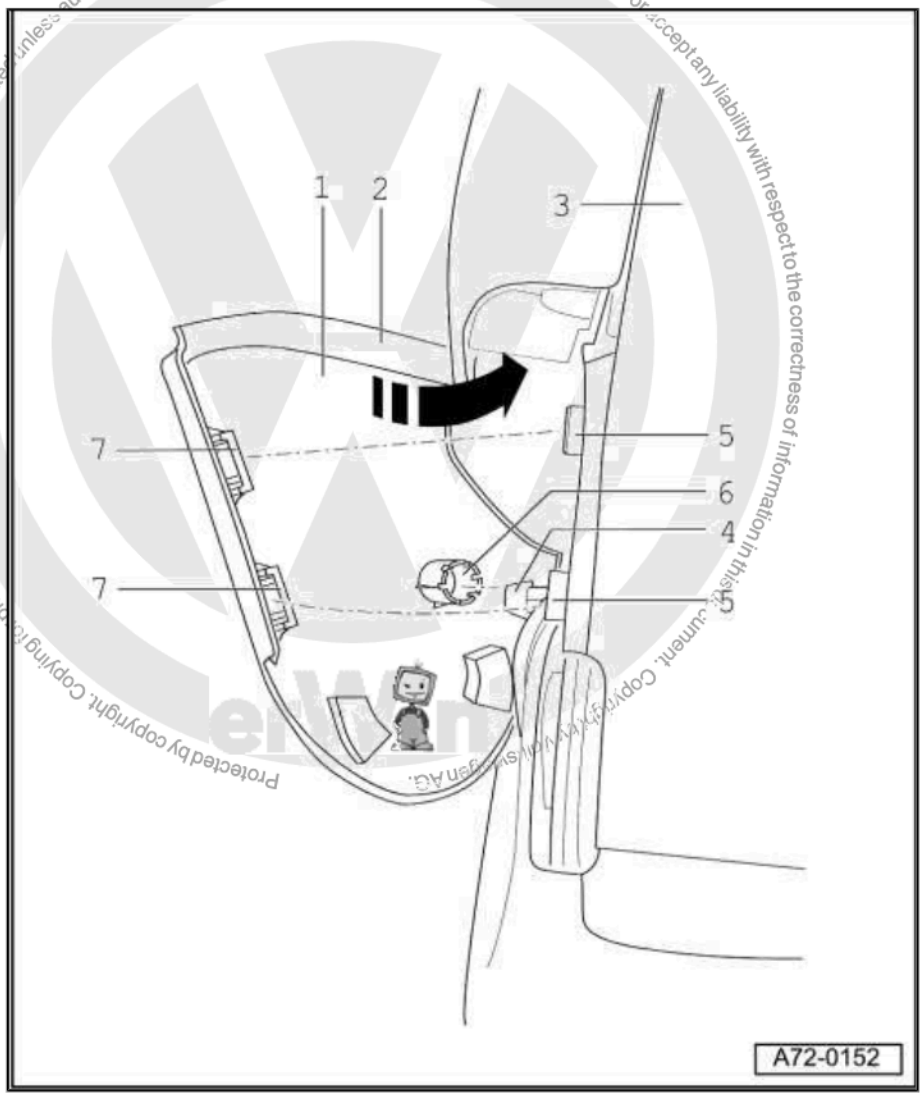

– Slide engage edge -2- on outer side of seat under side airbag module.

– Press trim in direction of -arrow- on backrest -3-, pins -4- and tabs -5- must engage in corresponding catches -6- and -7-.

2.2.3 Seat Cushion Extension

Removing

– Remove Recaro seat. Refer to
⇒ “2.2.1 Recaro Seats”, page 177

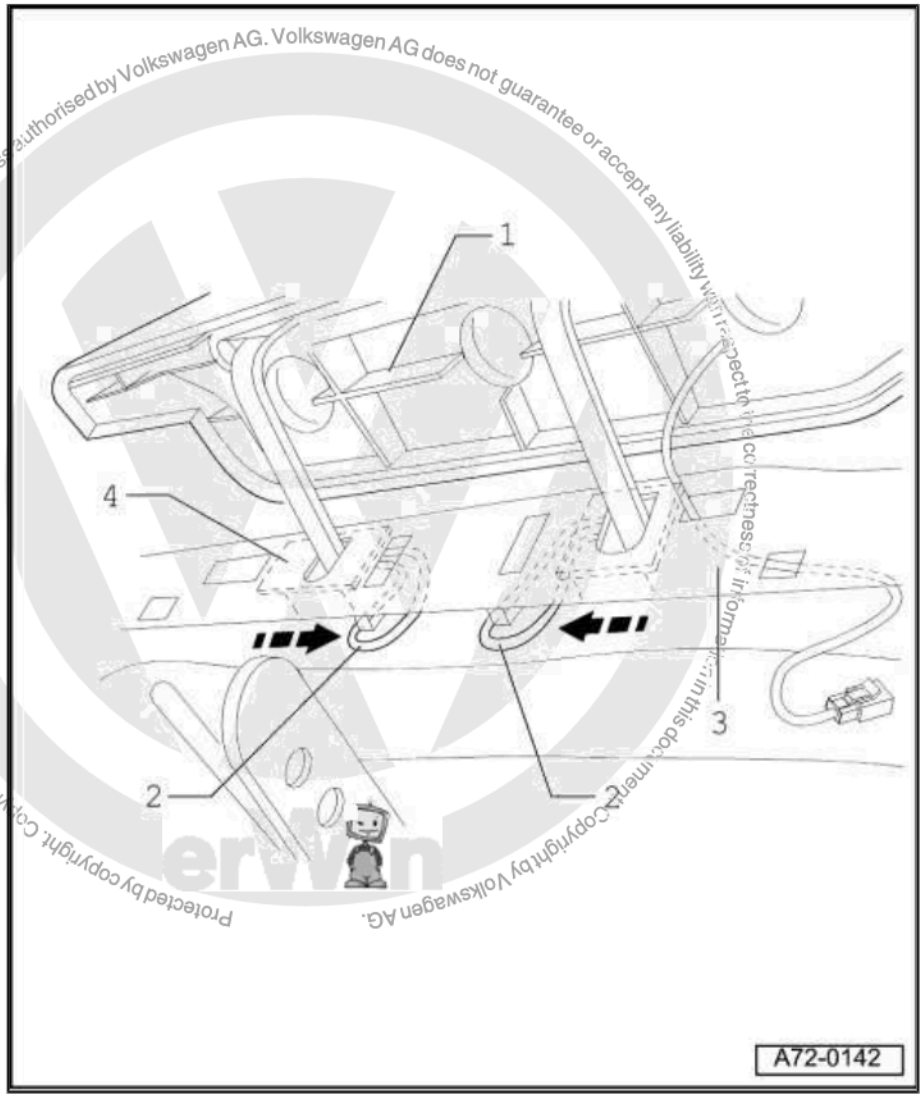

Protected by copyright. Copying for private or commercial purposes, in part or in whole, is not permitted unless authorised by Volkswagen AG. Volkswagen AG does not guarantee or accept any liability with respect to the correctness of information in this document. Copyright by Volkswagen AG.

– Press both springs -2- inward -arrows- with pliers or a screwdriver.
– Remove seat surface extension -1- from seat.
– Disconnect wiring harness in vehicles with seat heater.
– Fold front cover -3- forward and guide cable through.

Only during later removal of seat area:

– Remove cover -3- from seat.
– Press guide sleeves -4- together with suitable pliers.
– Remove guide sleeves from seat.

Note

When installing, guide sleeves -4- must be replaced.

Installing

To install, perform the steps used in removal in reverse order.

2.2.4 Spring Cover

Note

Removal and installation is described for the left-hand side of the vehicle. Removal and installation for the right-hand side is performed in the same manner.

Removing

– Remove Recaro seat. Refer to
⇒ "2.2.1 Recaro Seats", page 177

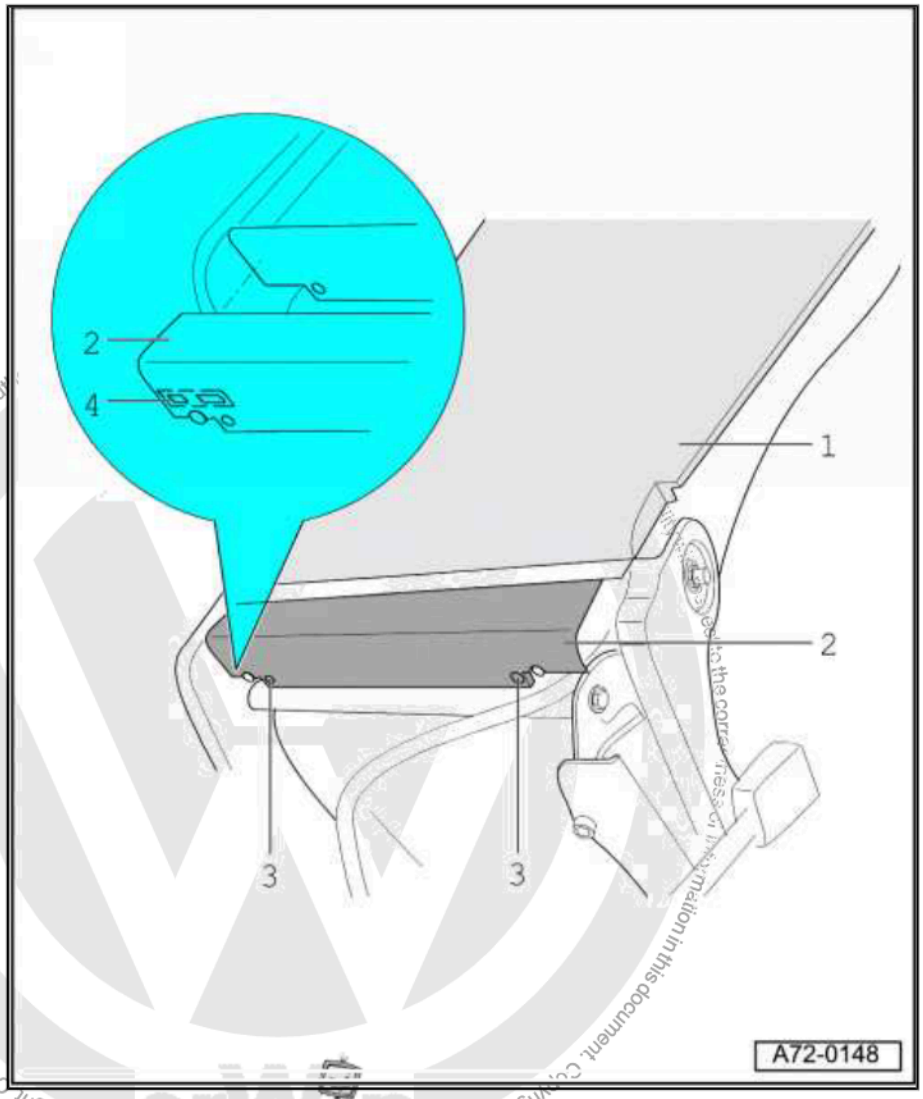

– Remove the two bolts -3-.
– Loosen spring cover -2- on right side from seat.
– Pull spring cover to right, clip -4- on left side of spring cover -2- is loosened.
– Remove spring cover from seat and backrest -1-.

Installing

To install, perform the steps used in removal in reverse order.

Protected by copyright. Copying for private or commercial purposes, in part or in whole, is not permitted unless authorised by Volkswagen AG. Copyright by Volkswagen AG.

2.2.5 Seat Area

Removing

- Remove Recaro seat. Refer to
  ⇒ “2.2.1 Recaro Seats”, page 177
- Remove seat surface extension. Refer to
  ⇒ “2.2.3 Seat Cushion Extension”, page 181
- Remove trim, backrest mounting bracket. Refer to
  ⇒ “2.2.2 Backrest Hinge Trim”, page 179
- Remove spring cover. Refer to
  ⇒ “2.2.4 Spring Cover”, page 183

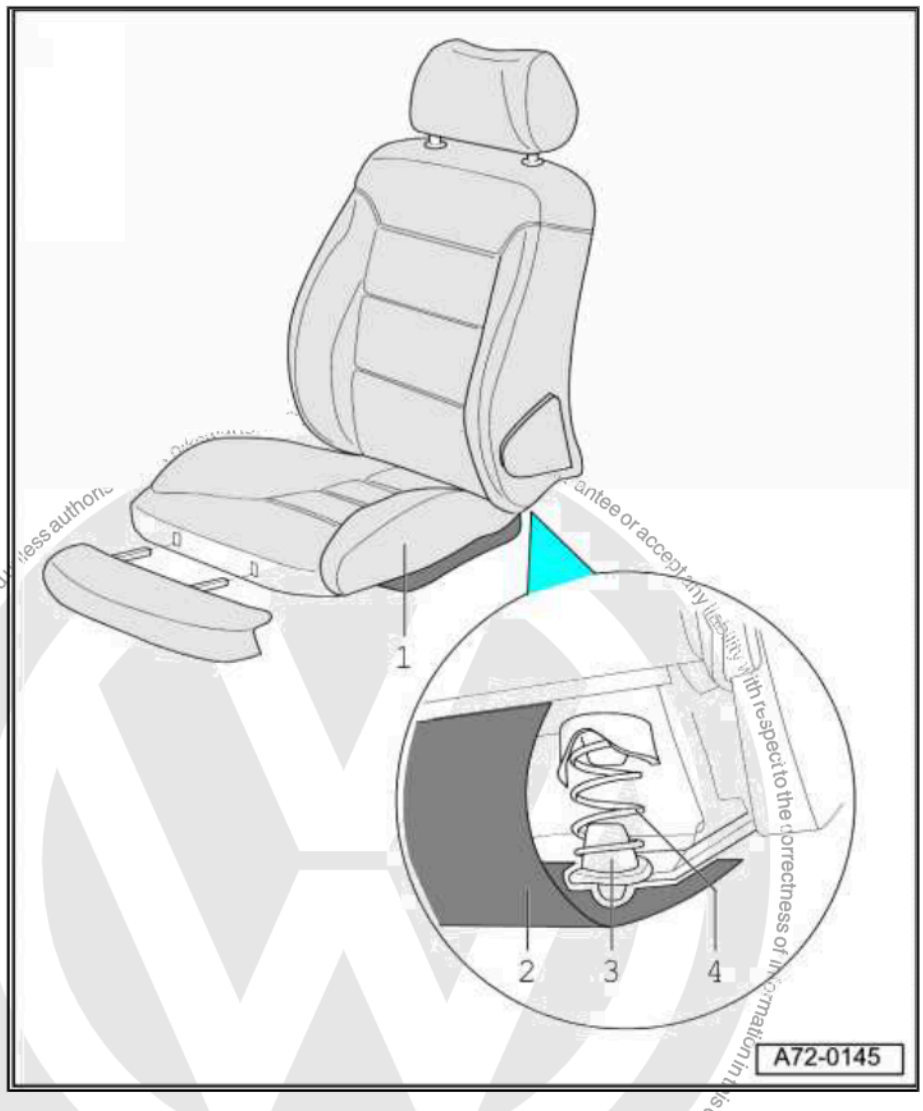

- Disengage electric cover -2- under seat.
- If present, disconnect respective seat heating and/or seat occupied recognition system wiring harness.
- Fold seat area -1- up in front area.
- Remove seat area forward.

Protected by copyright. Copyright by Volkswagen AG.

Note

When removing seat area, the two springs -4- and two rubber buffers -3- in the backrest area fall out.

Installing

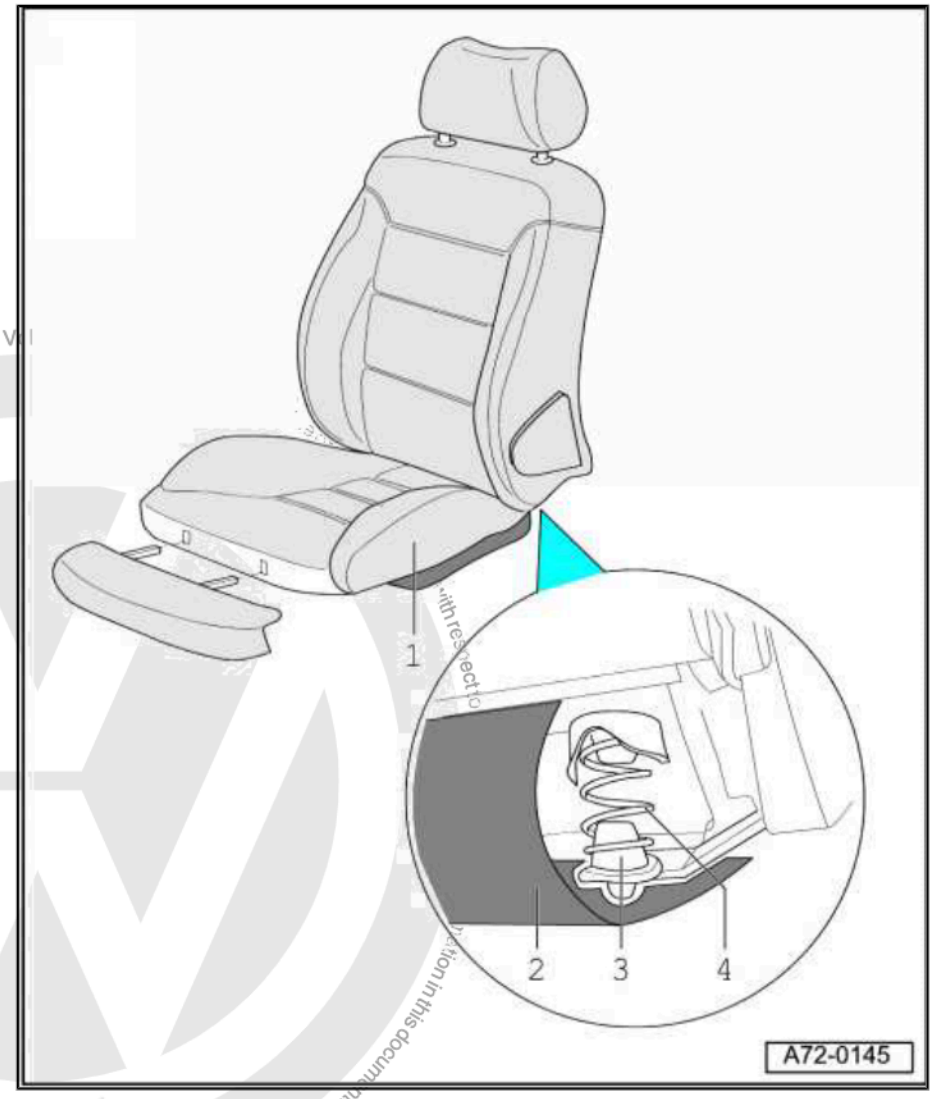

- Place rubber buffers-3- and springs -4- into corresponding mounts.
- Guide electric cover -2- between backrest and seat frame.
- Insert seat area -1- so springs -4- are located on rubber buffers -3-.
- Press seat area back.
- Press seat area down in front area.
- If present, connect seat heating/seat occupied recognition system wiring harnesses.
- Engage electric cover -2- under seat.

Protected by copyright. Copying for private or commercial purposes, in part or in whole, is not permitted unless authorised by Volkswagen AG. Volkswagen AG

2.2.6 Seat Side Trim

Note

Removal and installation of trim is described for Recaro seat on right side of vehicle. Removal and installation of Recaro seat trim on left side is the same.

Removing

- Remove Recaro seat. Refer to ⇒ "2.2.1 Recaro Seats", page 177
- Remove belt buckle. Refer to ⇒ "4.1.1 Belt Buckle", page 56
- Remove trim, backrest mounting bracket. Refer to ⇒ "2.2.2 Backrest Hinge Trim", page 179

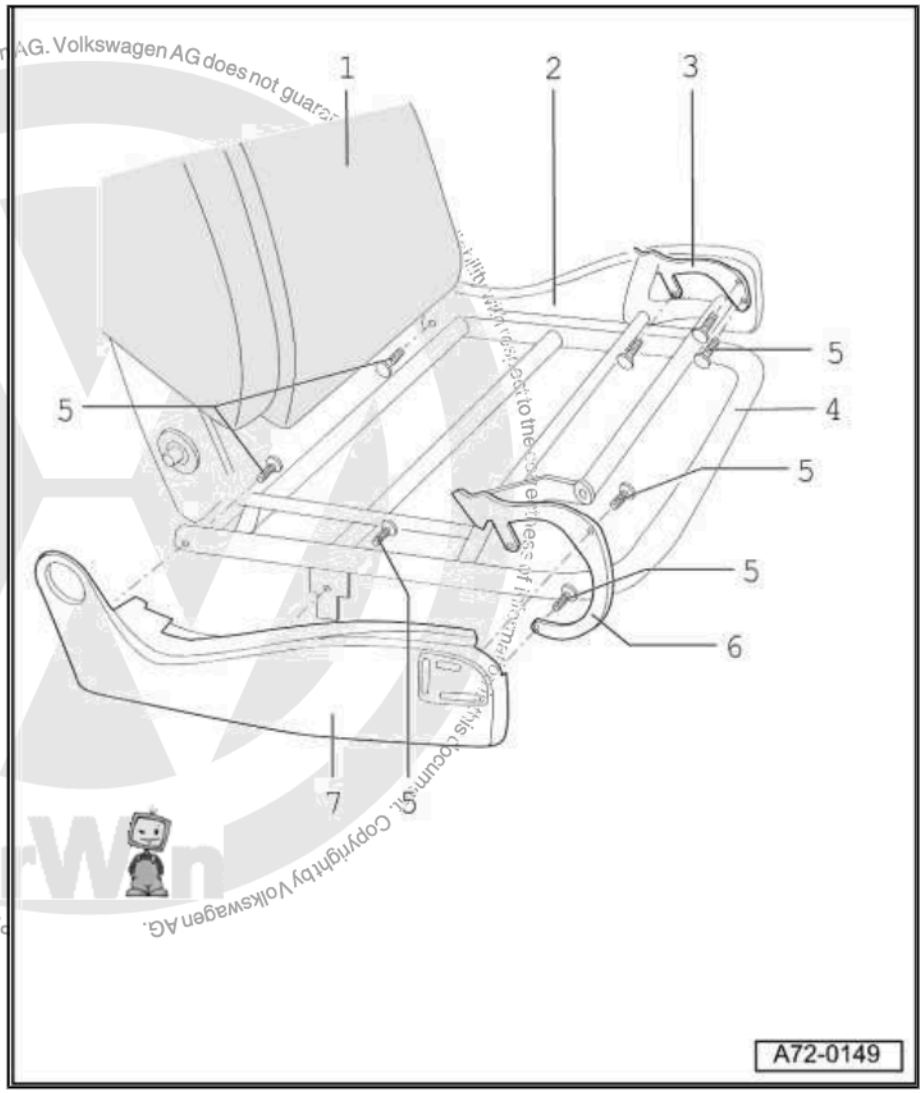

Protected by copyright. Copying for private or commercial purposes, in part or in whole, is not permitted unless authorised by Volkswagen AG. Volkswagen AG does not guarantee the accuracy and completeness of this document. Copyright by Volkswagen AG.

- Disconnect switch unit wiring harnesses on outer seat side trim and remove them from seat frame -4-.
- Remove four respective screws -5- on both sides of seat.
- Loosen inner seat side trim -2- from bracket -3- and backrest -1-.

– Loosen outer seat side trim -7- from bracket -6- and backrest -1-.

Installing

To install, perform the steps used for removal in reverse order.

2.2.7 Backrest

Note

Removal and installation of backrest is described for Recaro seat on left side of vehicle. Removal and installation of Recaro seat backrest on right side is the same.

Removing

– Remove Recaro seat. Refer to ⇒ “2.2.1 Recaro Seats”, page 177

– Remove belt buckle. Refer to ⇒ “4.1.1 Belt Buckle”, page 56

– Remove trim, backrest mounting bracket. Refer to ⇒ “2.2.2 Backrest Hinge Trim”, page 179

– Remove seat side trim. Refer to ⇒ “2.2.6 Seat Side Trim”, page 186

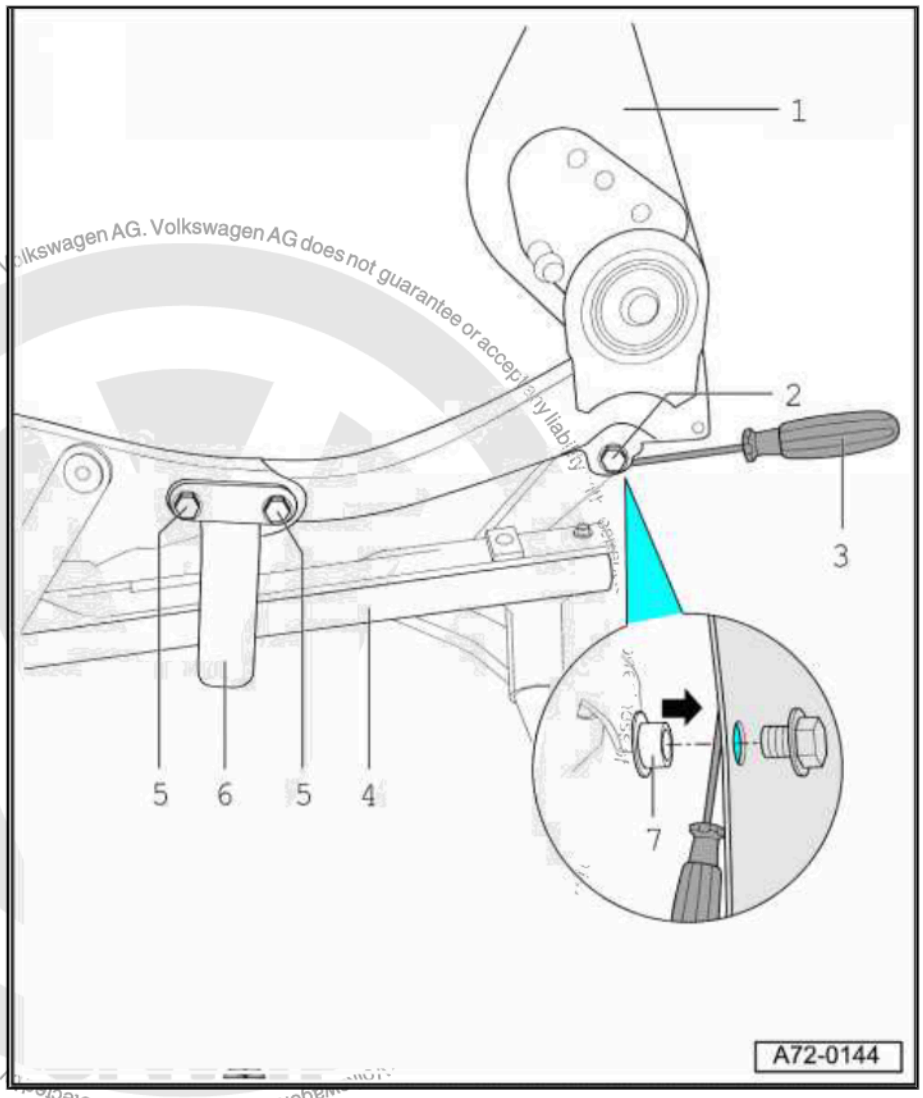

Protected by copyright. Copying for private or commercial purposes, in part or in whole, is not permitted unless authorised by Volkswagen AG. Volkswagen AG does not guarantee or accept any liability

– Remove wiring harnesses (seat heating and side airbag) from seat frame.
– Remove bolt -2- on both sides of the seat (23 Nm).
– Remove bolts -5- on both sides of the bolts (23 Nm).
– Pry backrest frame -1- out of bushings -7- on both sides in seat frame -4- using a screwdriver -3-.

Installing

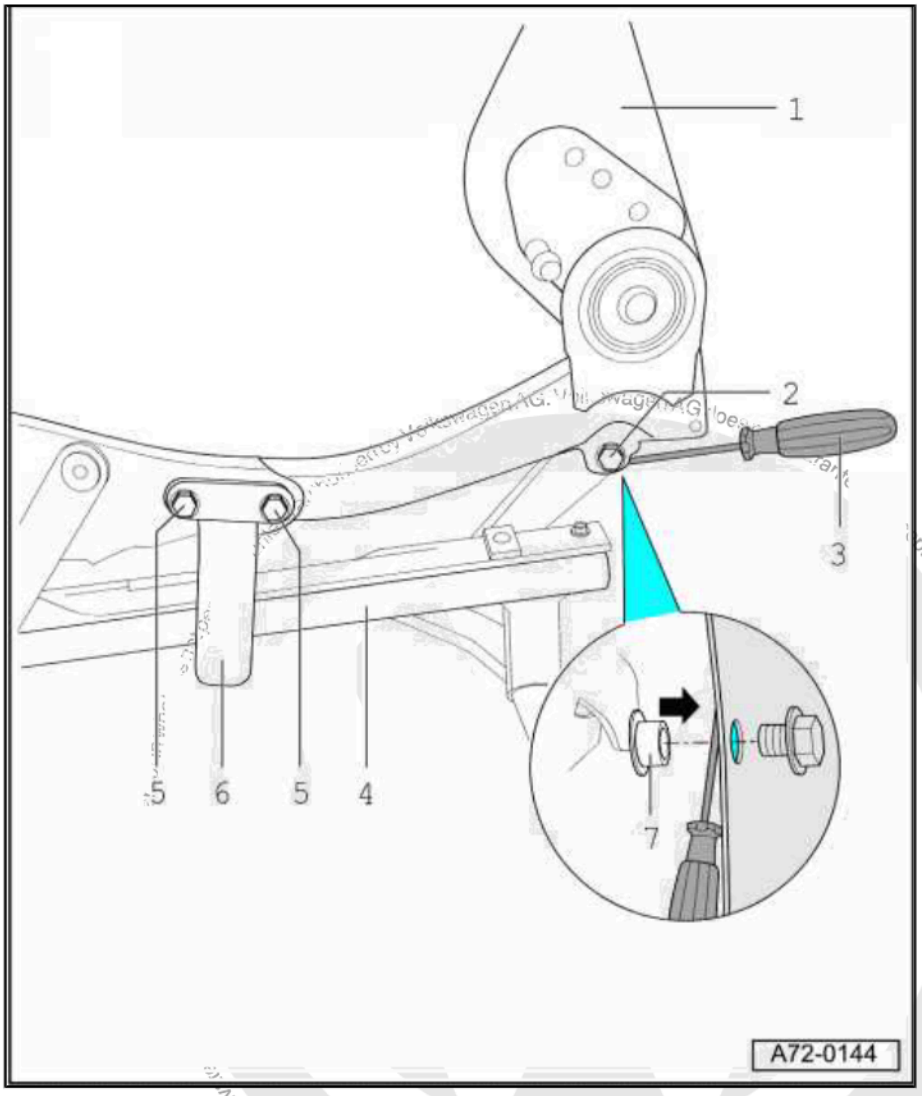

To install, perform the steps used for removal in reverse order.

Note

- *Bolts -2- and -5- must always be replaced after removing backrest.*
- *Bolts -2- and -5- may only be installed after all other bolts have been inserted.*
- *Note that the bolts -5- on inner side of vehicle are longer than those on outer side.*
- *Bracket -6- is only installed on outer side.*

Protected by copyright. Copyright by Volkswagen AG. Not any liability with respect to the correctness of information in this document.

2.2.8 Back Shell

Removing

- Remove Recaro sea. Refer to
  ⇒ “2.2.1 Recaro Seats”, page 177
- Remove belt buckle. Refer to ⇒ “4.1.1 Belt Buckle”, page 56
- Remove trim, backrest mounting bracket. Refer to
  ⇒ “2.2.2 Backrest Hinge Trim”, page 179
- Remove spring cover. Refer to
  ⇒ “2.2.4 Spring Cover”, page 183
- Remove seat side trim. Refer to
  ⇒ “2.2.6 Seat Side Trim”, page 186
- Remove backrest. Refer to ⇒ “2.2.7 Backrest”, page 187
- Remove side airbag. Refer to
  ⇒ “4.3 Driver Side and Passenger Side Curtain Airbag, Recaro Seat”, page 65
- Remove cover and cushion from backrest. Refer to
  ⇒ “1.2.3 Backrest Cover and Cushion”, page 238 .

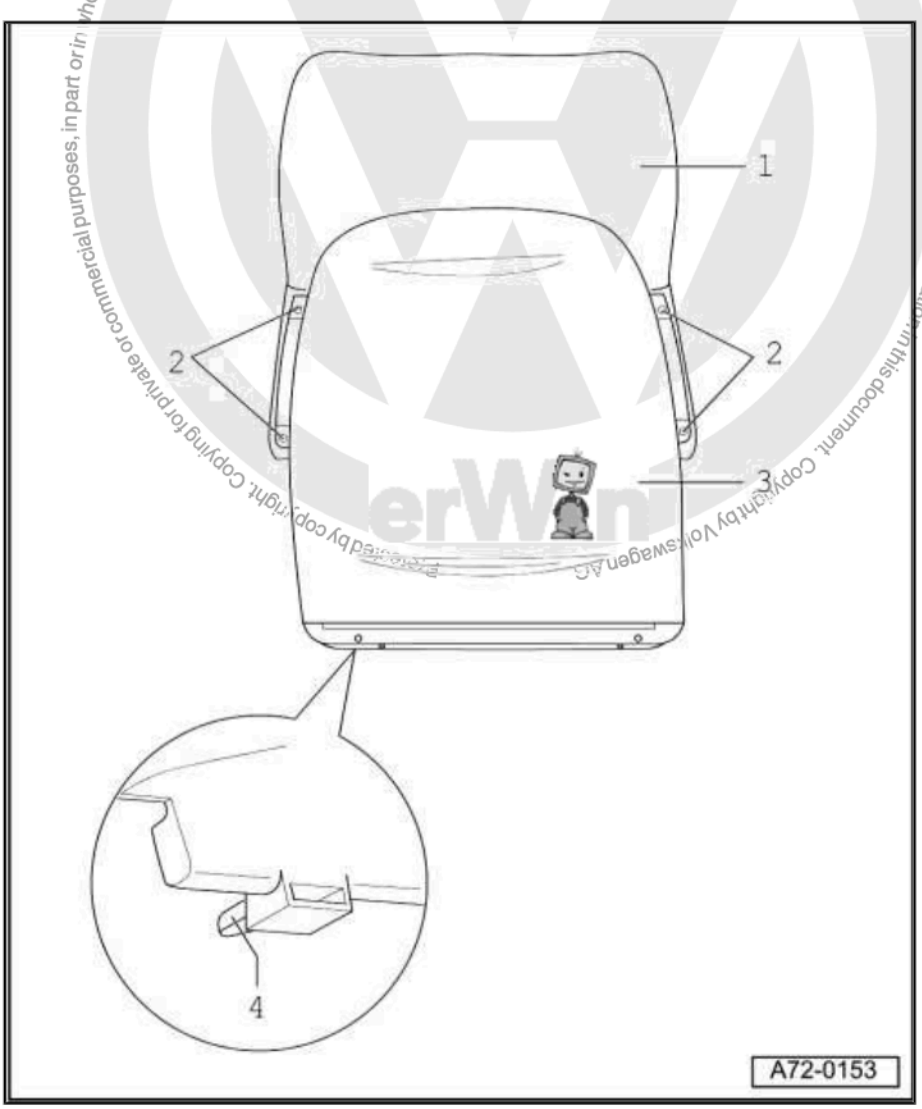

- Remove two bolts on the right and left -2-.

Protected by copyright. Copying for private or commercial purposes, in part or in whole, is not permitted unless authorised by Volkswagen AG. Volkswagen AG does not guarantee or accept any liability with respect to the correctness of information in this document. Copyright by Volkswagen AG.

– Loosen rear shell -3- from backrest in area of two clips -4-.
– Pull back shell of mounts in backrest -1-.

Installing

To install, perform the steps used for removal in reverse order.

2.2.9 2-Way Lumbar Support

Removing

– Remove Recaro seat. Refer to ⇒ “2.2.1 Recaro Seats”, page 177
– Remove belt buckle. Refer to ⇒ “4.1.1 Belt Buckle”, page 56
– Remove trim, backrest mounting bracket. Refer to ⇒ “2.2.2 Backrest Hinge Trim”, page 179
– Remove spring cover. Refer to ⇒ “2.2.4 Spring Cover”, page 183
– Remove seat side trim. Refer to ⇒ “2.2.6 Seat Side Trim”, page 186
– Remove backrest. Refer to ⇒ “2.2.7 Backrest”, page 187
– Remove side airbag. Refer to ⇒ “4.3 Driver Side and Passenger Side Curtain Airbag, Recaro Seat”, page 65
– Remove cover and cushion from backrest. Refer to ⇒ “1.2.3 Backrest Cover and Cushion”, page 238 .
– Remove back shell. Refer to ⇒ “2.2.8 Back Shell”, page 189

Protected by copyright. Copying for private or commercial purposes, in part or in whole, is not permitted unless authorised by Volkswagen AG. Volkswagen AG does not guarantee or accept any liability with respect to the correctness of information in this document. Copyright by Volkswagen AG.

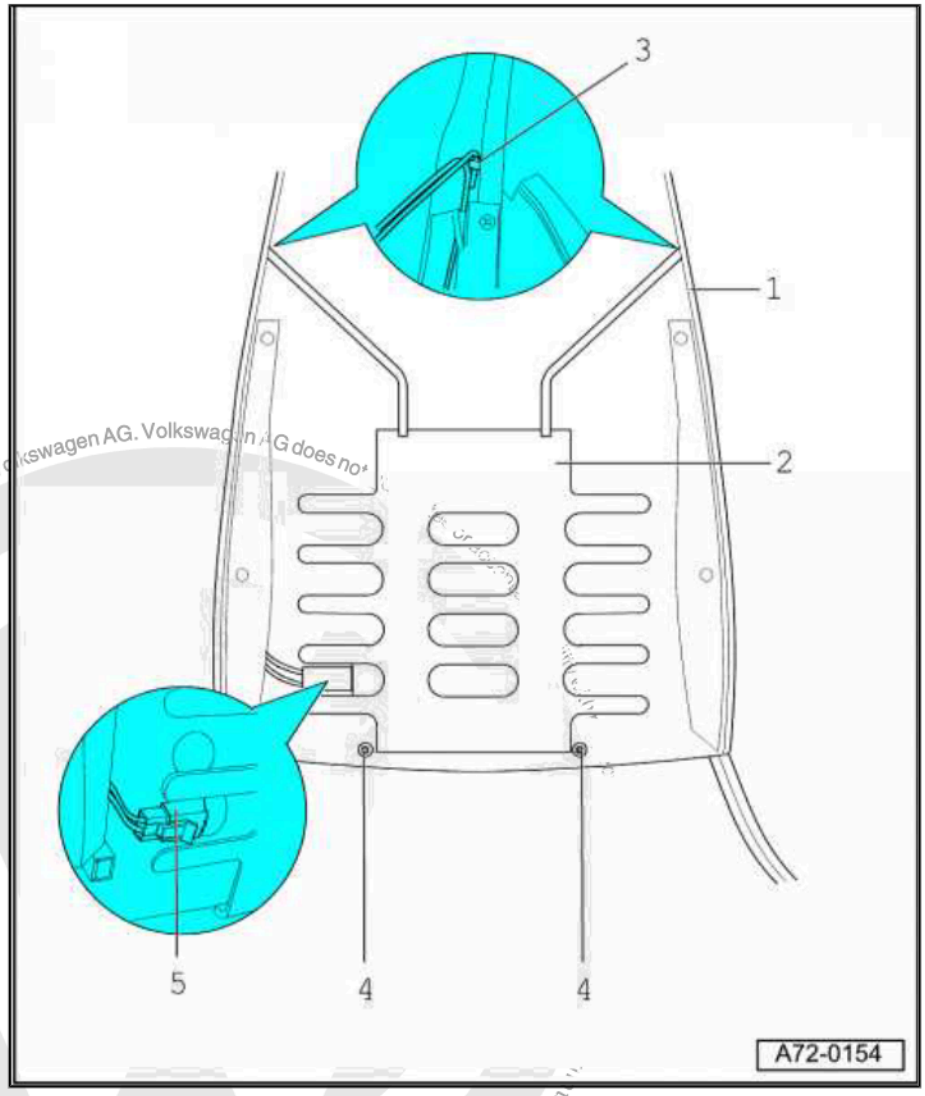

Protected by copyright. Copying for private or commercial purposes, in part or in whole, is not permitted unless authorised by Volkswagen AG. Volkswagen AG does not guarantee the accuracy of this document. Copyright by Volkswagen AG.

– Disconnect connector -5- from lumbar support motor.
– Remove the two bolts -4-.
– Disengage retaining hooks -3-, lumbar support -2- from backrest frame -1-.

Installing

To install, perform the steps used for removal in reverse order.

2.2.10 2-Way Lumbar Support Motor with Gears

Removing

– Remove Recaro seat. Refer to ⇒ “2.2.1 Recaro Seats”, page 177
– Remove belt buckle. Refer to ⇒ “4.1.1 Belt Buckle”, page 56
– Remove trim, backrest mounting bracket. Refer to ⇒ “2.2.2 Backrest Hinge Trim”, page 179
– Remove spring cover. Refer to ⇒ “2.2.4 Spring Cover”, page 183
– Remove seat side trim. Refer to ⇒ “2.2.6 Seat Side Trim”, page 186

– Remove backrest. Refer to ⇒ “2.2.7 Backrest”, page 187

– Remove side airbag. Refer to ⇒ “4.3 Driver Side and Passenger Side Curtain Airbag, Recaro Seat”, page 65

– Remove cover and cushion from backrest. Refer to ⇒ “1.2.3 Backrest Cover and Cushion”, page 238 .

– Remove back shell. Refer to ⇒ “2.2.8 Back Shell”, page 189

– Remove 2-way lumbar support. Refer to ⇒ “2.2.9 2-Way Lumbar Support”, page 190

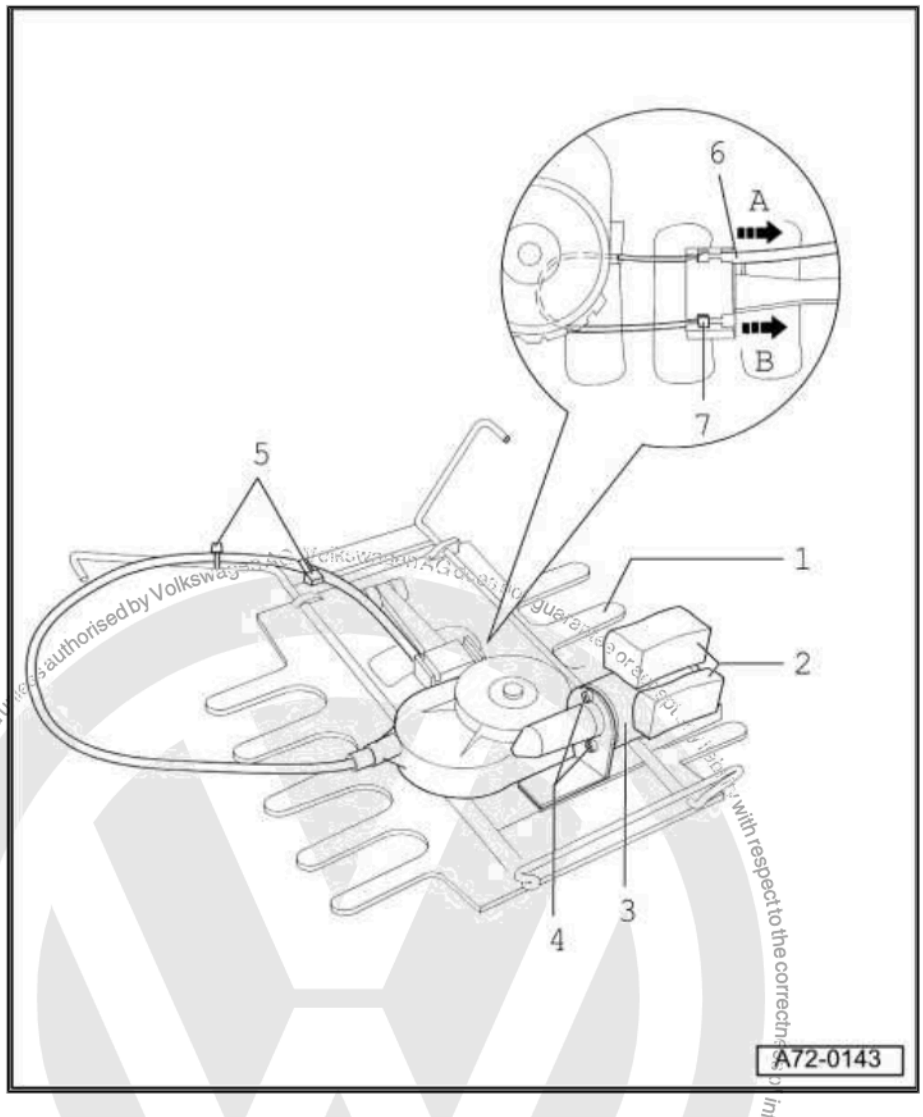

– Cut through two cable ties -5-.

– Press lumbar support body together and disengage release -6- in direction of -arrow A-.

– Slide retaining pins -7- in direction of -arrow B- out of retainer.

– Remove the two bolts -4-.

– Remove engine with gears and release -3- from lumbar support unit -1-.

Installing

Protected by copyright. Copying for private or commercial purposes, in part or in whole, is not permitted unless authorised by Volkswagen AG. Copyright by Volkswagen AG. No guarantee or liability with respect to the correctness of information in this document.

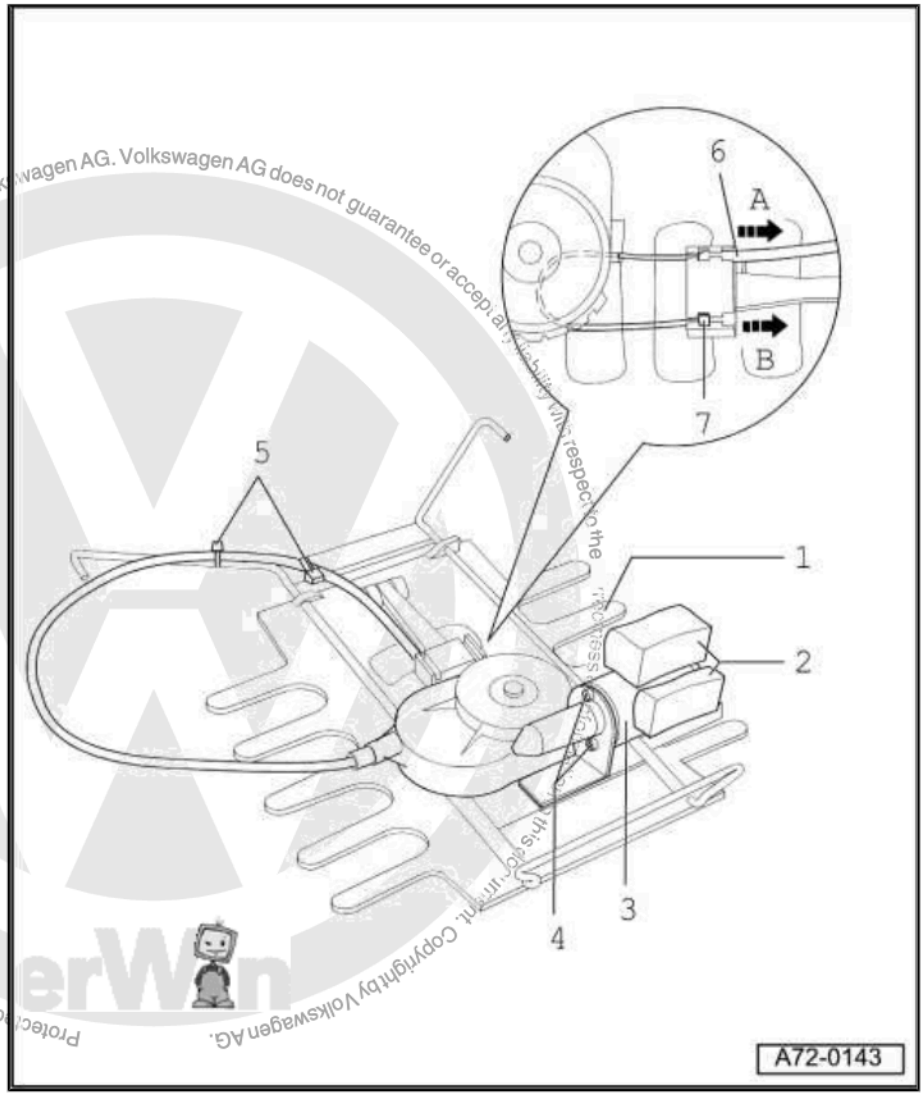

Protected by copyright. Copying for private or commercial purposes, in part or in whole, is not permitted unless authorised by Volkswagen AG. Volkswagen AG does not guarantee or accept any liability with respect to the correctness of this document. Copyright by Volkswagen AG.

To install, perform the steps used for removal in reverse order.

Note

If replacement part does not have foam pieces -2-, the existing ones must be reused.

2.2.11 Seat Height Adjustment Motor

Removing

- Using electric seat adjustment, place Recaro seat as high as possible.
- Remove Recaro seat. Refer to ⇒ “2.2.1 Recaro Seats”, page 177
- Remove seat surface extension. Refer to ⇒ “2.2.3 Seat Cushion Extension”, page 181
- Remove trim, backrest mounting bracket. Refer to ⇒ “2.2.2 Backrest Hinge Trim”, page 179
- Remove spring cover. Refer to ⇒ “2.2.4 Spring Cover”, page 183
- Remove seat area. Refer to ⇒ “2.2.5 Seat Area”, page 184

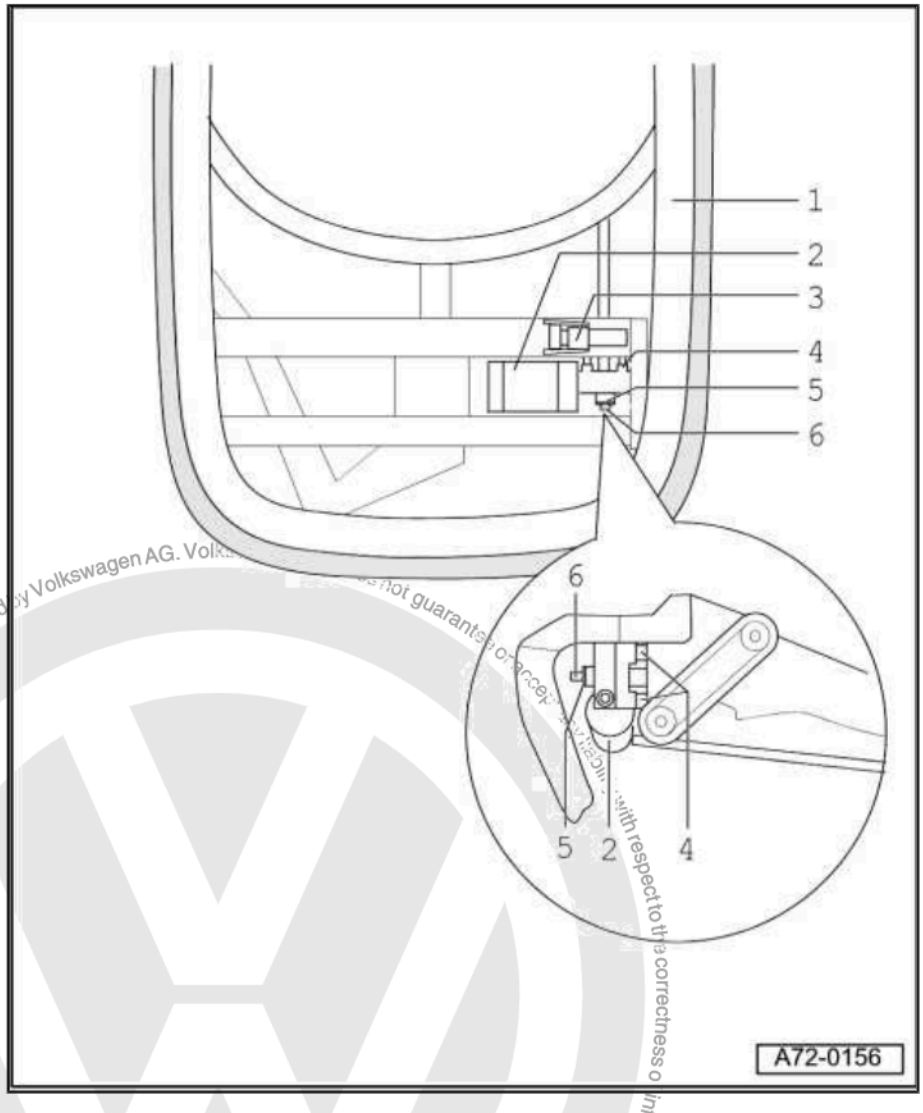

– Disconnect wiring harness from seat height adjustment motor -4-.
– Disconnect connector housing -3- from seat frame -1-.
– Using a screwdriver, pry locking washer -5- from shaft -6-.
– Pull motor down from shaft.

Installing

Protected by copyright. Copying for private or commercial purposes, in part or in whole, is not permitted unless authorised by Volkswagen AG. Volkswagen AG does not guarantee or accept any liability with respect to the correctness of information in this document. Copyright by Volkswagen AG.

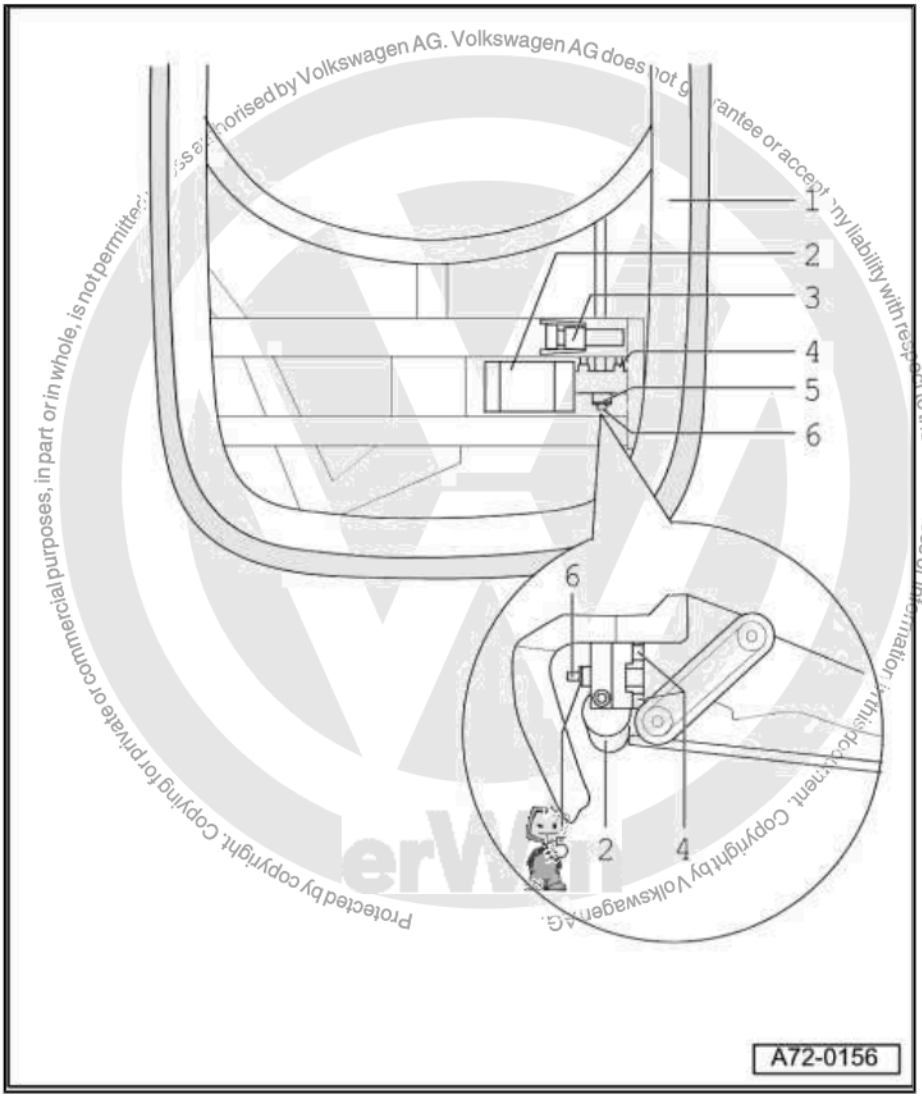

To install, perform the steps used for removal in reverse order.

Note

When installing, ensure bushings -4- are seated correctly in seat frame.

2.2.12 Backrest Motor with Gears

Removing

- Remove Recaro seat. Refer to ⇒ “2.2.1 Recaro Seats”, page 177
- Remove belt buckle. Refer to ⇒ “4.1.1 Belt Buckle”, page 56
- Remove trim, backrest mounting bracket. Refer to ⇒ “2.2.2 Backrest Hinge Trim”, page 179
- Remove spring cover. Refer to ⇒ “2.2.4 Spring Cover”, page 183
- Remove seat side trim. Refer to ⇒ “2.2.6 Seat Side Trim”, page 186
- Remove backrest. Refer to ⇒ “2.2.7 Backrest”, page 187

– Remove side airbag. Refer to ⇒ “4.3 Driver Side and Passenger Side Curtain Airbag, Recaro Seat”, page 65

– Remove cover and cushion from backrest. Refer to ⇒ “1.2.3 Backrest Cover and Cushion”, page 238 .

– Remove back shell. Refer to ⇒ “2.2.8 Back Shell”, page 189

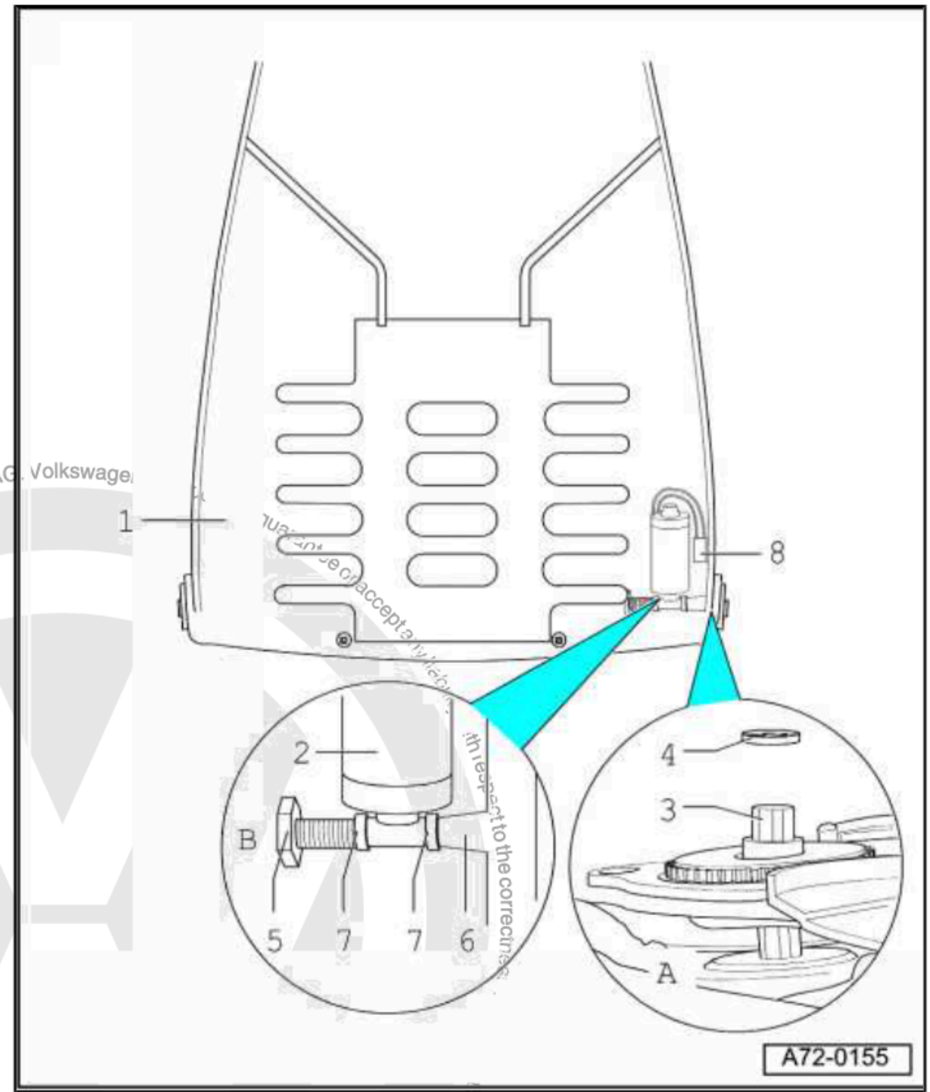

Protected by copyright. Copying for private or commercial purposes, in part or in whole, is not permitted unless authorised by Volkswagen AG. Volkswagen AG does not guarantee or accept any liability with respect to the correctness of information in this document. Copyright by Volkswagen AG.

– Using a screwdriver, loosen spring washer -4- from shaft -3- -(magnified area A)-.

– Pull shaft -3- out of backrest frame -1- until backrest motor -2- can be removed.

– Disconnect connector -8-.

– Remove bolt -5- from threaded bushing -6- and remove plastic washers -7- and backrest motor -2- from backrest frame -1- -(magnified area B)-.

Installing

To install, perform the steps used for removal in reverse order.

2.2.13 Switch Unit

Removing

Note

- *It is not possible to remove the switch, removal and installation of circuit board with wiring harness is described.*
- *If a switch is faulty, outer seat side trim should be replaced.*

– Remove Recaro seat. Refer to
⇒ “2.2.1 Recaro Seats”, page 177

– Remove belt buckle. Refer to ⇒ “4.1.1 Belt Buckle”, page 56

– Remove trim, backrest mounting bracket. Refer to
⇒ “2.2.2 Backrest Hinge Trim”, page 179

– Remove seat side trim on door sill side. Refer to
⇒ “2.2.6 Seat Side Trim”, page 186

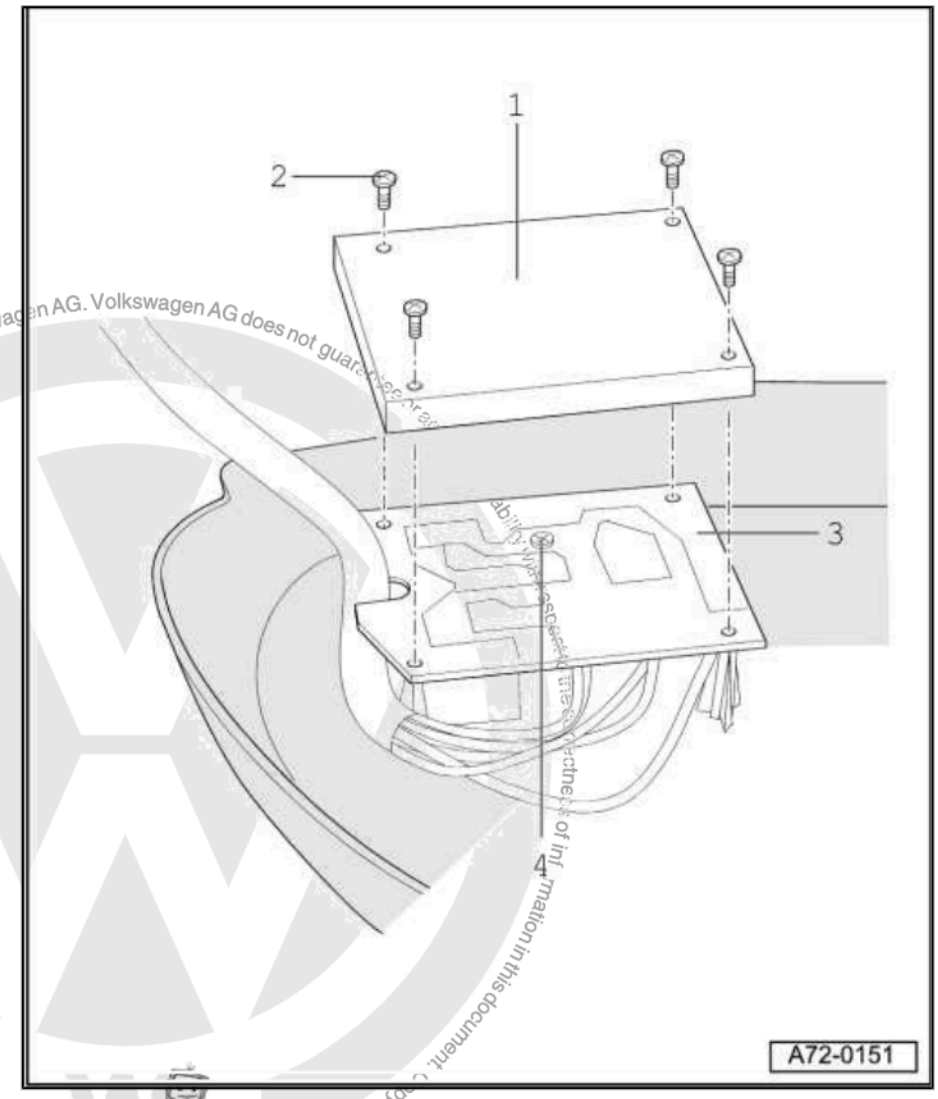

– Disconnect switch unit wiring harness -3- and remove from seat frame.

Protected by copyright. Copyright by Volkswagen AG.
Copyright by Volkswagen AG. Volkswagen AG does not guarantee the correctness of information in this document. Copying for private or commercial purposes, in part or in whole, is not permitted unless authorised by Volkswagen AG.

– Remove four bolts -2- and remove cover -1-.
– Remove bolt -4- and remove circuit board -3- from switches in seat trim.

Installing

To install, perform the steps used for removal in reverse order.

2.3 Rear Seats

⇒ “2.3.1 Sedan Bench Seat”, page 198

⇒ “2.3.2 Bench Seat, Wagon”, page 200

⇒ “2.3.3 One-part Rear Seat Backrest”, page 201

⇒ “2.3.4 Two-Part Rear Seat Backrest”, page 204

W8 Sedan ⇒ “2.3.5 Rears Seat Backrest”, page 207

⇒ “2.3.6 Left Backrest Lock”, page 211

through 07/1998
⇒ “2.3.7 Bench Seat, Retrofitting with Integrated Child Seat”, page 212

from 08/1998
⇒ “2.3.8 Bench Seat, Retrofitting with Integrated Child Seat”, page 216

through 07/1998
⇒ “2.3.9 Bench Seat, Wagon, Retrofitting with Integrated Child Seat”, page 219

from 08/1998
⇒ “2.3.10 Bench Seat, Wagon, Retrofitting with Integrated Child Seat”, page 223

⇒ “2.3.11 Child Seat Bracket Retrofitting, Bobsy G1 ISOFIX”, page 226

2.3.1 Sedan Bench Seat

Removing

Protected by copyright. Copying for private or commercial purposes, in part or in whole, is not permitted unless authorised by Volkswagen AG. Volkswagen AG does not guarantee or accept any liability with respect to the correctness of information in this document. Copyright by Volkswagen AG.

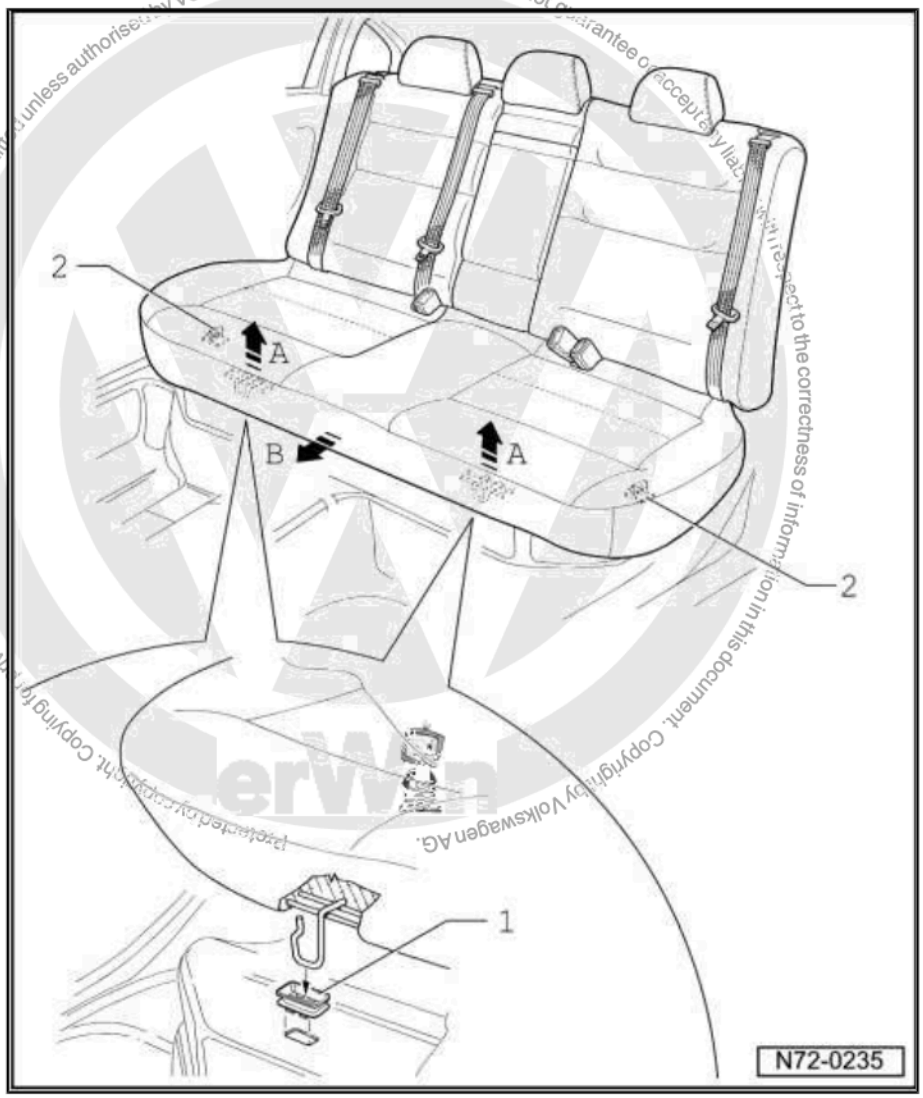

– Lift the bench seat -arrows A- and pull it forward -arrow B-.

Installing

Protected by copyright. Copying for private or commercial purposes, in part or in whole, is not permitted unless authorised by Volkswagen AG. Volkswagen AG does not guarantee or accept any liability with respect to the correctness of information in this document. Copyright by Volkswagen AG.

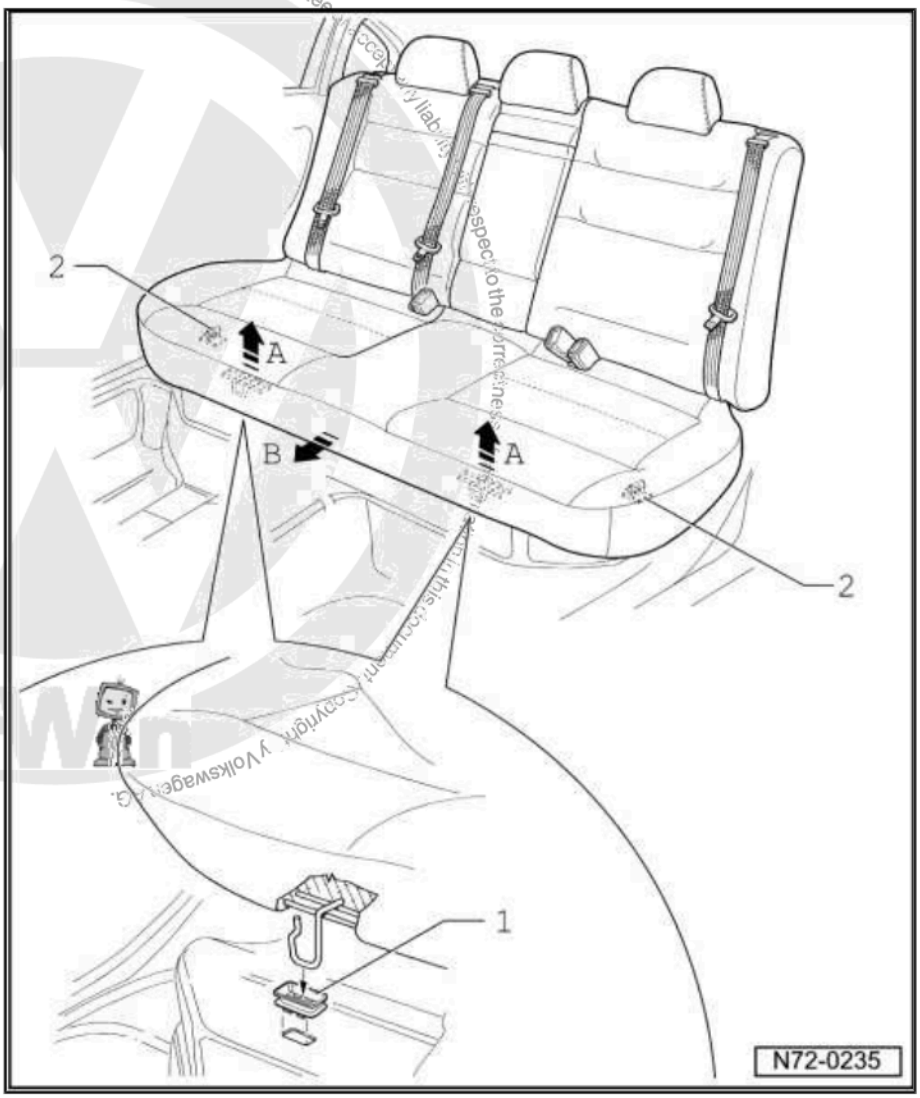

To install, perform the steps used in removal in reverse order.

Note

- *Before installing the bench seat, replace the plastic sleeves -1-.*
- *The bench seat is secured by two guides -2- located on the sides.*

2.3.2 Bench Seat, Wagon

Removing

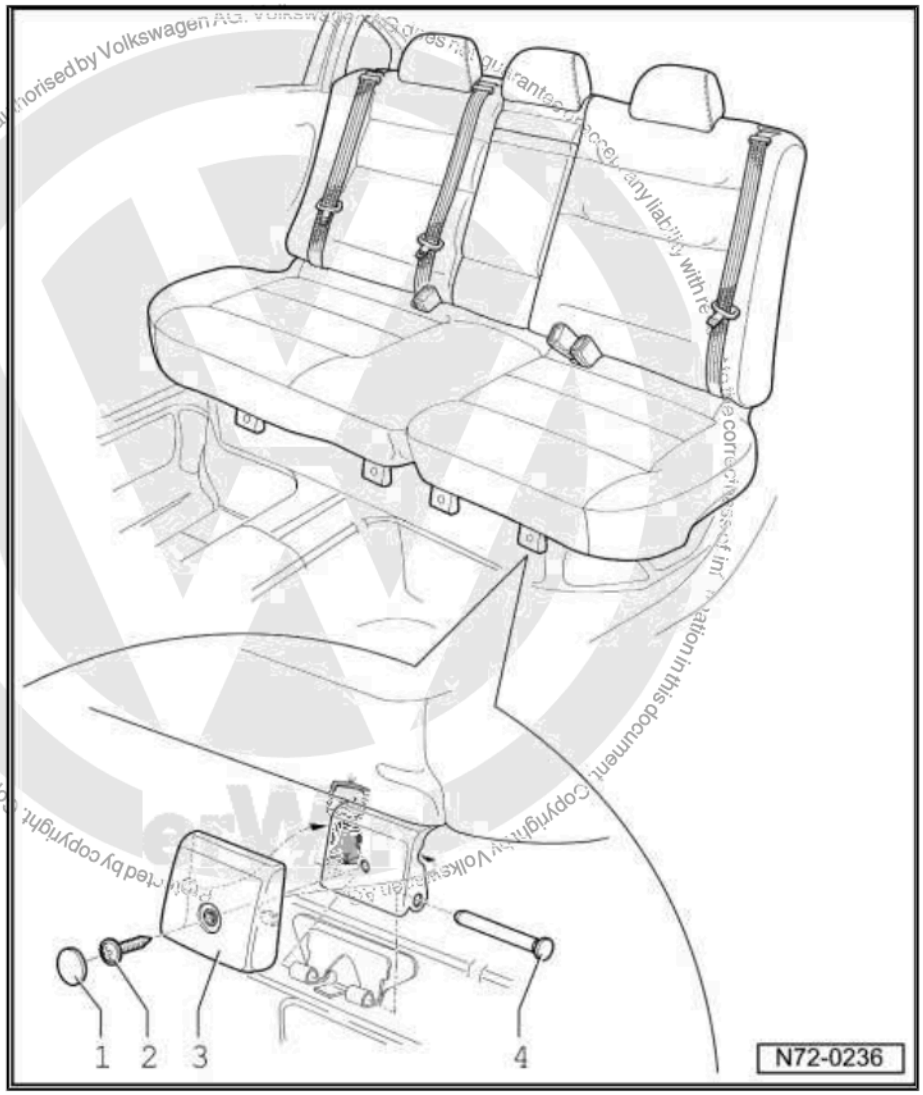

Copyright by Volkswagen AG. Volkswagen AG does not guarantee or accept any liability with respect to the correctness of information in this document. Copying for private or commercial purposes, in part or in whole, is not permitted unless authorised by Volkswagen AG.

– Unclip cover cap -1- and remove screw -2- (2.7 Nm).
– Remove cover -3-, remove hinge pins -4-.
– Remove the remaining hinge pins and then remove the right and left bench seat.

Installing

To install, perform the steps used in removal in reverse order.

2.3.3 One-part Rear Seat Backrest

Removing

– Remove seat bench.
– Remove headrests.

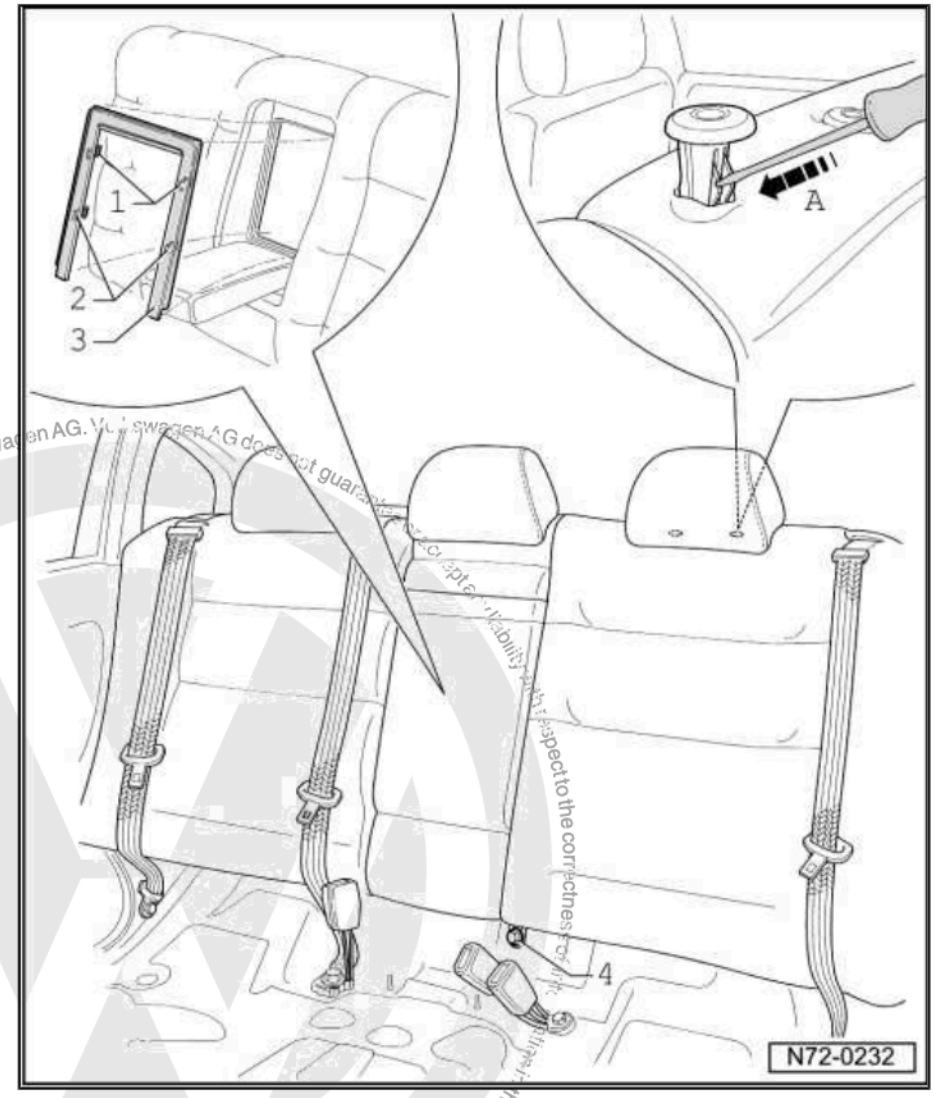

Protected by copyright. Copyright by Volkswagen AG. Volkswagen AG does not guarantee or accept any liability with respect to the correctness of information in this document. Copyright by Volkswagen AG. Protected by copyright. Copying for private or commercial purposes, in part or in whole, is not permitted unless authorised by Volkswagen AG.

– Press cushion down in area of headrest guides and release catches in direction of travel -arrow A- using a screwdriver.
– Pull headrest guides upward.
– Fold up center arm rest, press catches -1- and -2- outward and remove frame -3-.
– Remove screw -4- (23 Nm).

Only vehicles with center three-point seat belt

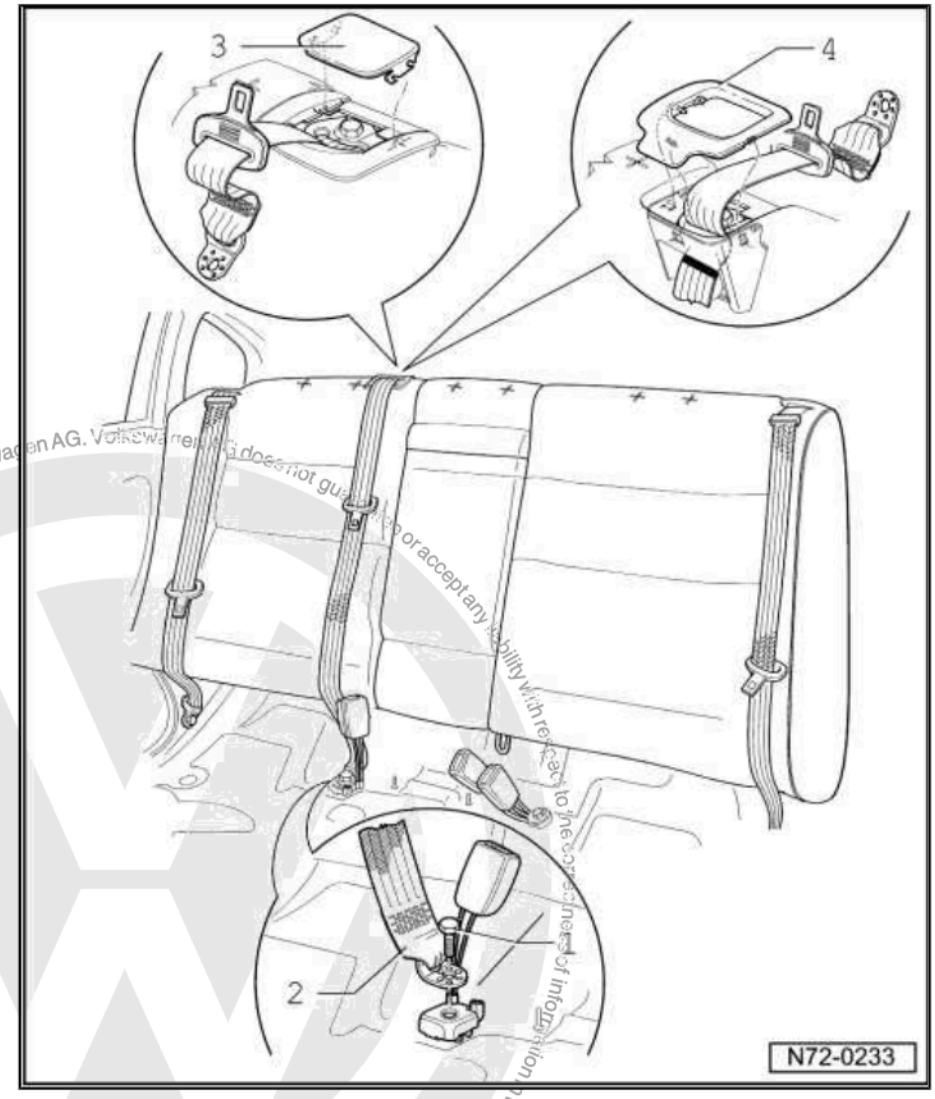

Protected by copyright. Copying for private or commercial purposes, in part or in whole, is not permitted unless authorised by Volkswagen AG. Volkswagen AG does not guarantee or accept any liability with respect to the correctness of information in this document. Copyright by Volkswagen AG.

– Remove screw -1- (40 Nm) and remove belt anchor from seat belt -2-.
– Unclip cover -3- and belt guide -4-.

Note

When installing, ensure headrest guides are installed before belt guide -4- and cover -3-.

All vehicles

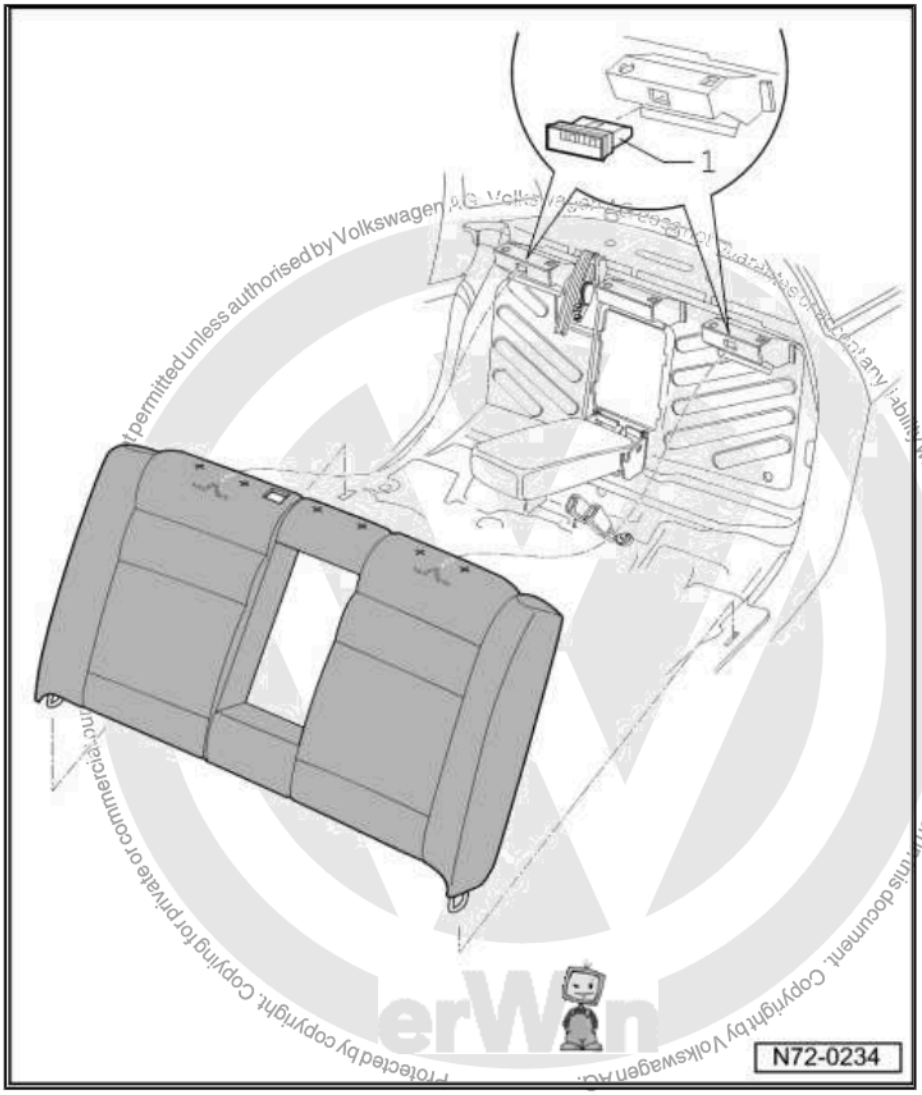

Protected by copyright. Copying for private or commercial purposes, in any form and by any means, is not permitted unless authorised by Volkswagen AG. Copyright by Volkswagen AG. Volkswagen AG does not guarantee or accept any liability with respect to the correctness of information in this document.

– Loosen rear seat backrest from catches in area of outer headrests.

– Remove backrest upward out of side catches in sill area.

Installing

To install, perform the steps used in removal in reverse order.

Note

Before installing rear seat backrest, replace mounting grommets -1-.

2.3.4 Two-Part Rear Seat Backrest

Removing

Vehicles without center three-point seat belt

– Fold rear seat backrests forward.

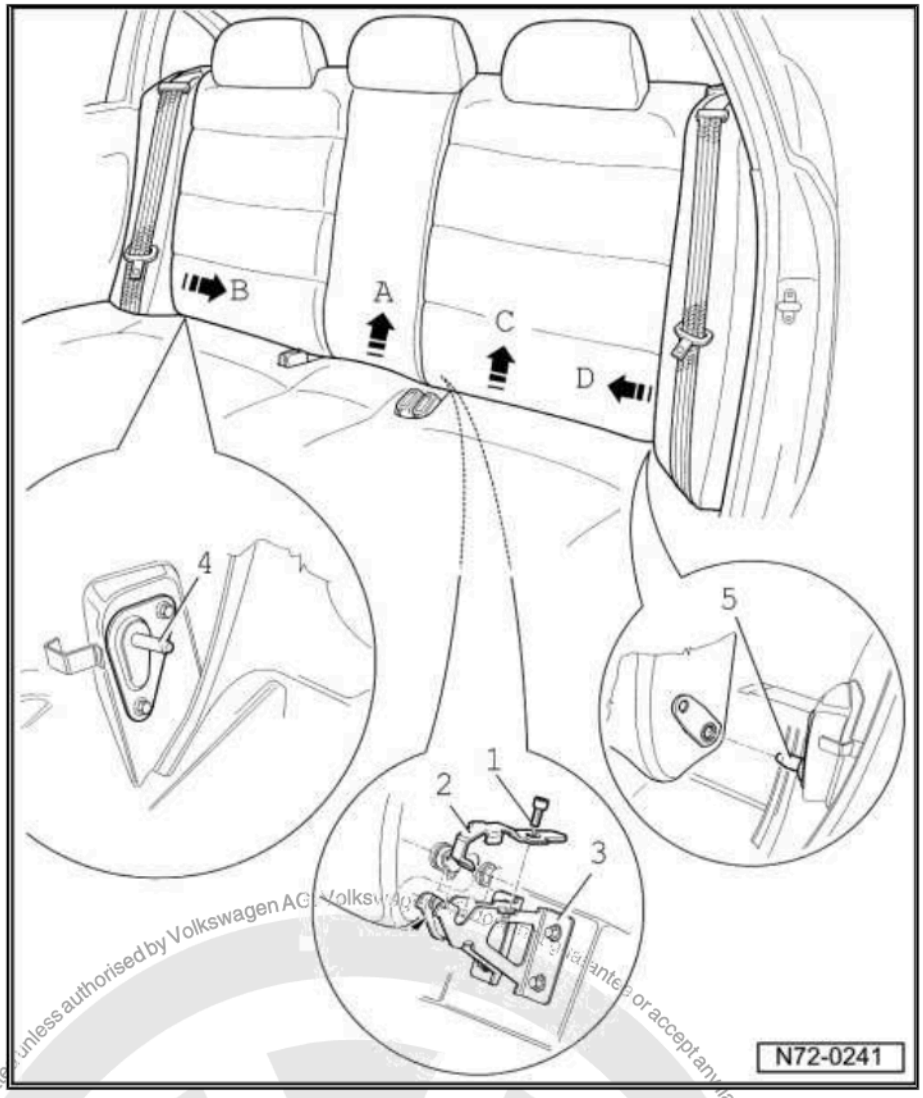

- Remove bolt -1- from backrest bracket -3- (8 Nm) and remove shell -2-.
- Remove right backrest upward out of backrest bracket -arrow A- and remove from pins -4- -arrow B-.
- Remove left backrest upward out of backrest bracket -arrow C- and from pins -5- -arrow D-.

Vehicles with center three-point seat belt

- Remove seat bench.

Protected by copyright. Copying for private or commercial purposes, in part or in whole, is not permitted unless authorised by Volkswagen AG. Volkswagen AG does not guarantee or accept any liability with respect to the correctness of information in this document. Copyright by Volkswagen AG.

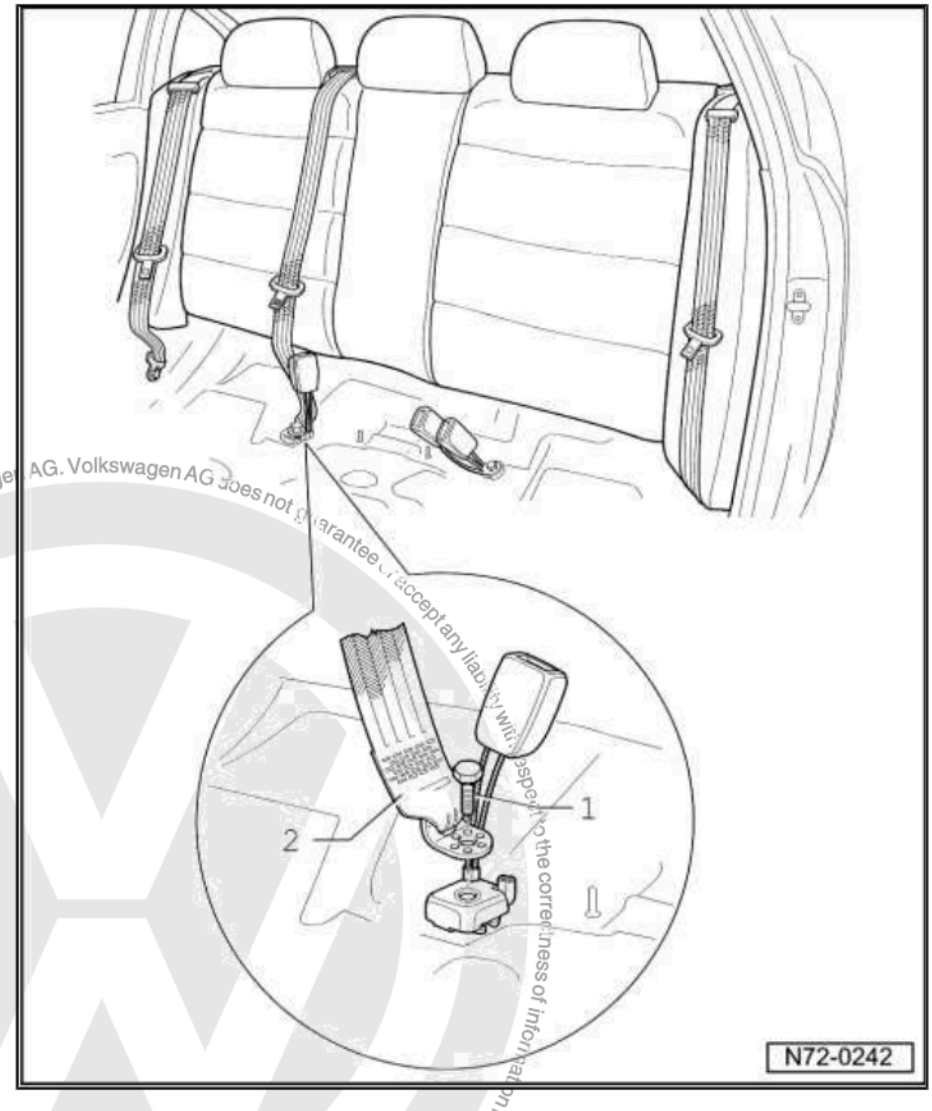

– Remove screw -1- (40 Nm) and remove belt anchor from seat belt -2-.
– Fold rear seat backrests forward.

Protected by copyright. Copying for private or commercial purposes, in part or in whole, is not permitted unless authorised by Volkswagen AG. Volkswagen AG does not guarantee or accept any liability with respect to the correctness of information in this document. Copyright by Volkswagen AG.

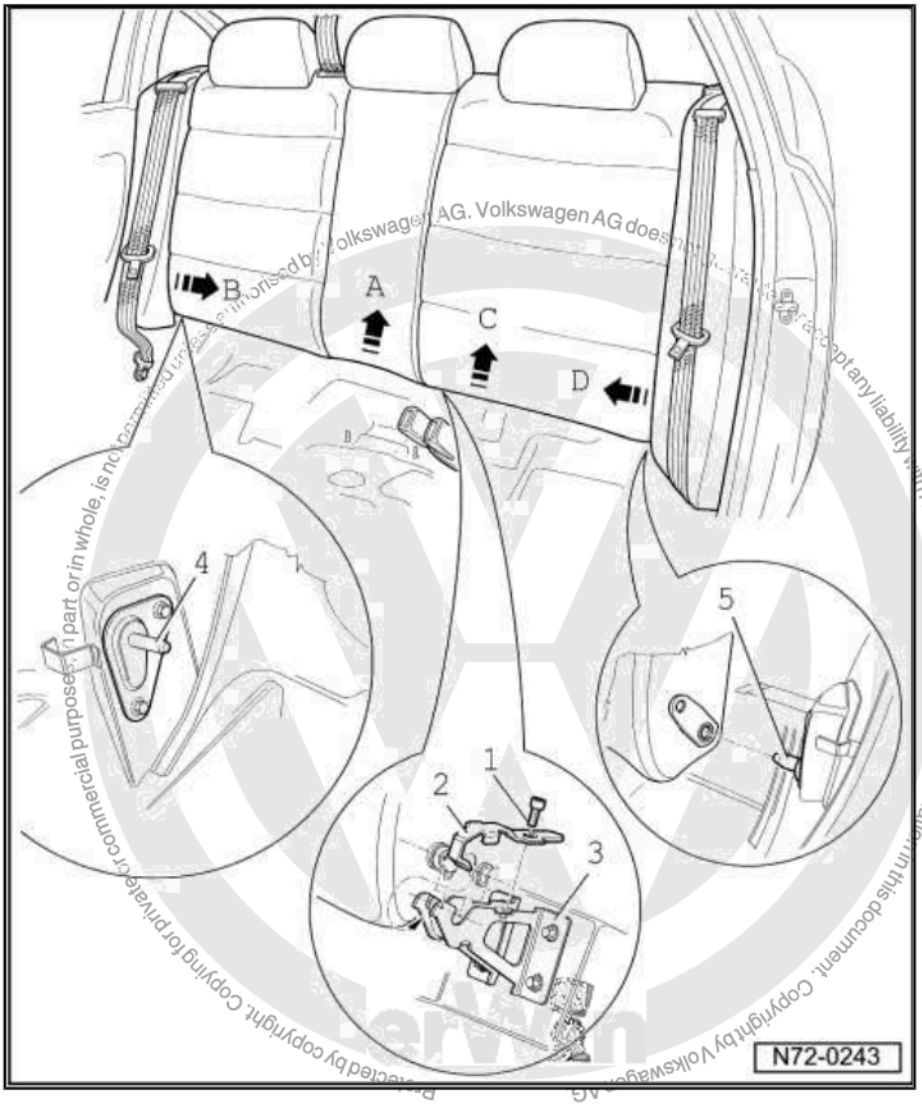

– Remove bolt -1- from backrest bracket -3- (8 Nm) and remove shell -2-.

– Remove right backrest upward out of backrest bracket -arrow A- and remove from pins -4- -arrow B-.

– Remove left backrest upward out of backrest bracket -arrow C- and from pins -5- -arrow D-.

Installing

To install, perform the steps used in removal in reverse order.

2.3.5 Rears Seat Backrest

Removing

Vehicles with partial leather

– One-part rear seat backrest, removing and installing. Refer to ⇒ "2.3.3 One-part Rear Seat Backrest", page 201

Vehicles with full leather or leather/Alcantara

– Remove seat bench.

– Remove headrests.

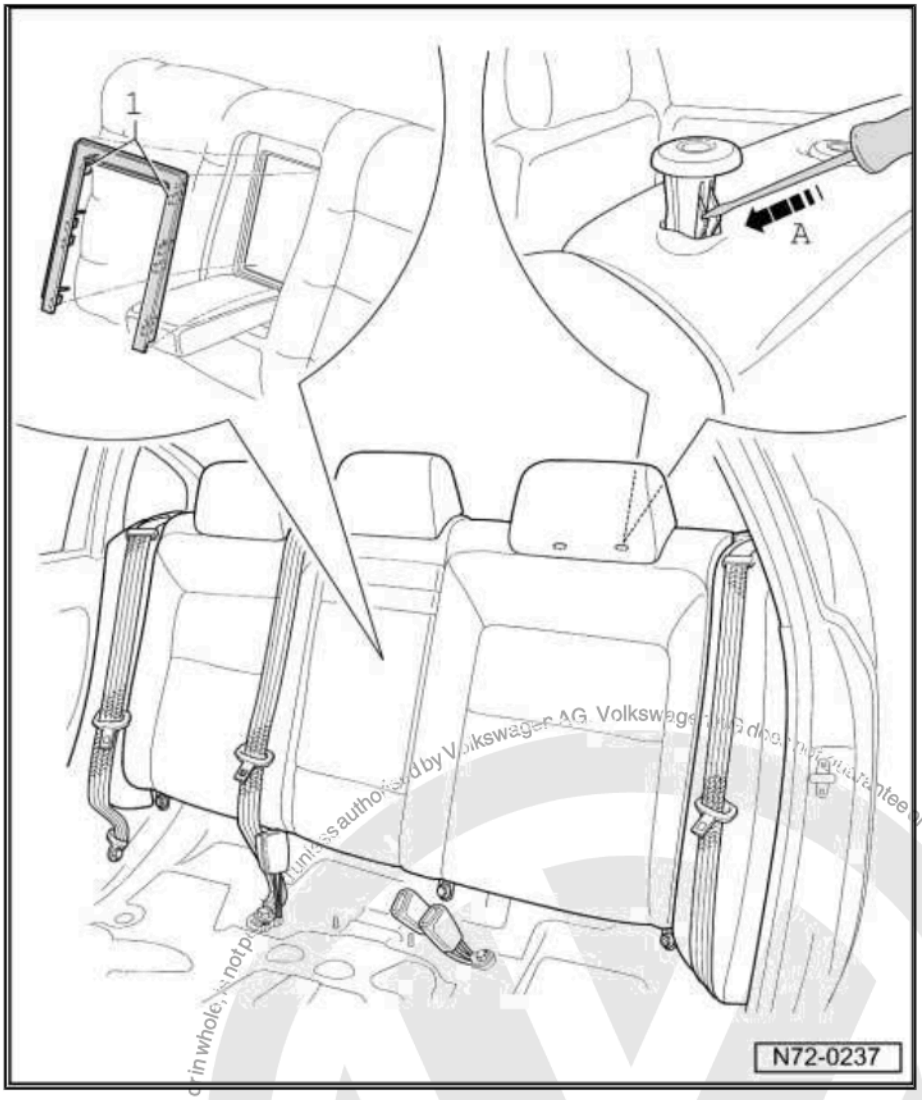

- Press cushion down in area of headrest guides and release catches in direction of travel -arrow A- using a screwdriver.
- Pull headrest guides upward.
- Fold up center armrest, press catches -1- outward and remove frame.

Protected by copyright. Copying for private or commercial purposes, in part or in whole, is not permitted unless authorised by Volkswagen AG. Volkswagen AG does not guarantee or accept any liability with respect to the correctness of information in this document. Copyright by Volkswagen AG.

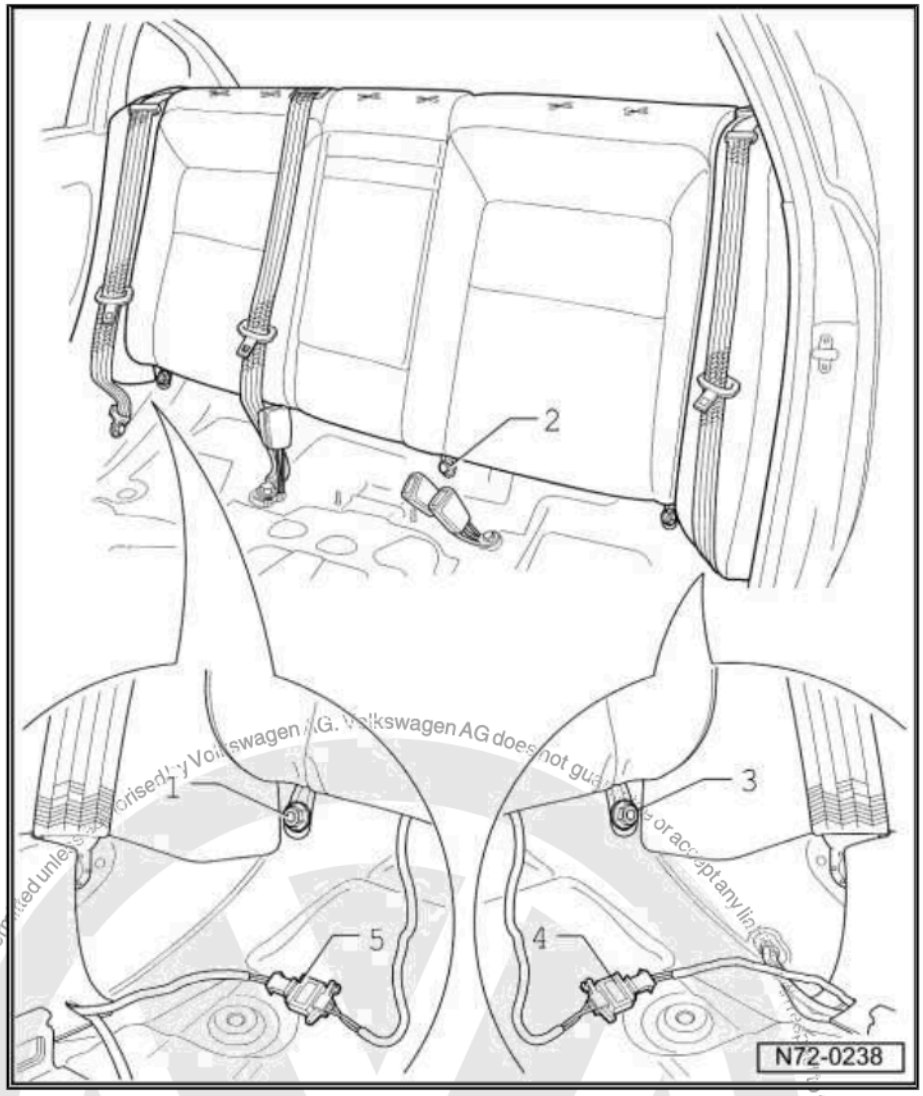

– Remove nuts -1- and -3- (23 Nm).
– Remove bolt -2- (23 Nm).

Only vehicles with heated rear seat system

– Switch off ignition.
– Disconnect connectors -4- and -5-.

Only vehicles with center three-point seat belt

Protected by copyright. Copying for private or commercial purposes, in part or in whole, is not permitted unless authorised by Volkswagen AG. Volkswagen AG does not guarantee or accept any liability with respect to the correctness of information in this document. Copyright by Volkswagen AG.

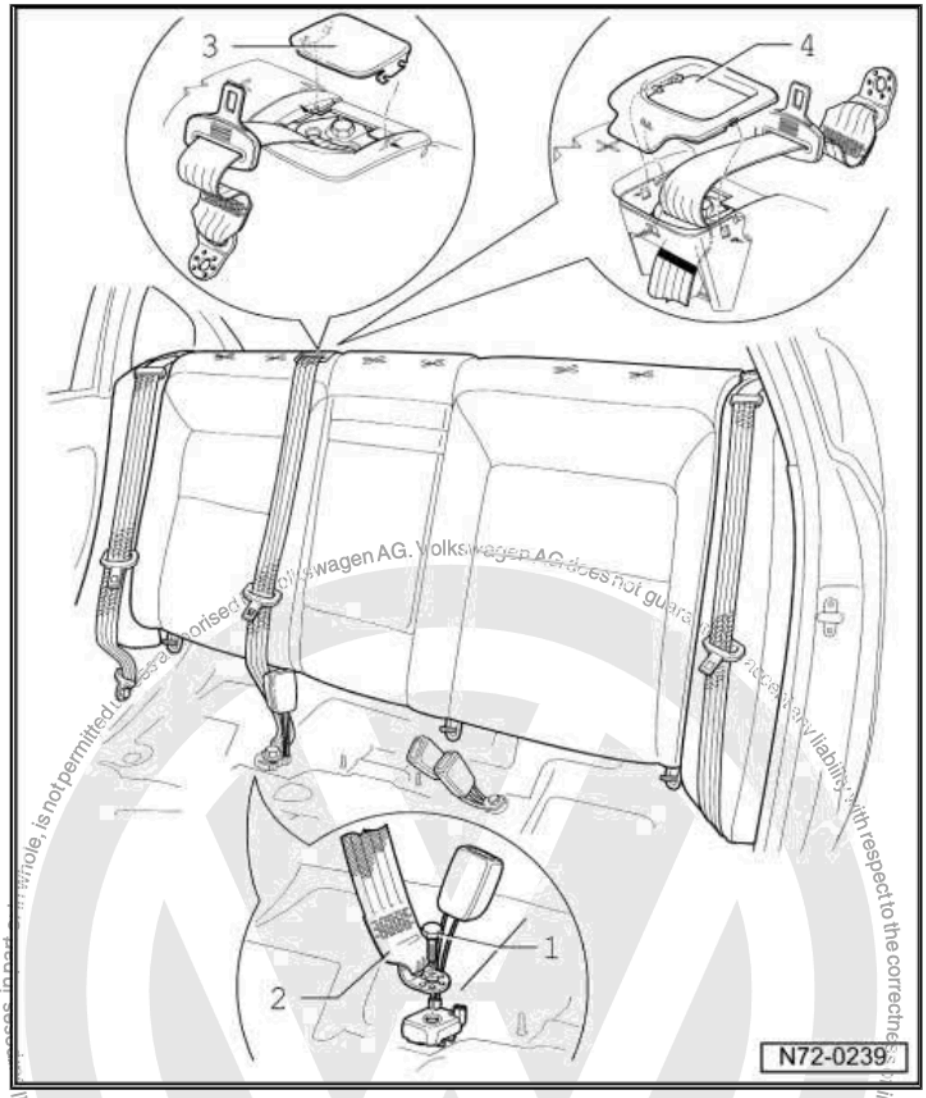

– Remove screw -1- (40 Nm) and remove belt anchor from seat belt -2-.
– Unclip cover -3- and belt guide -4-.

Note

When installing, ensure headrest guides are installed before belt guide -4- and cover -3-.

All vehicles

Protected by copyright. Copying for private or commercial purposes, in part or in whole, is not permitted unless authorised by Volkswagen AG. Volkswagen AG does not guarantee or accept any liability with respect to the correctness of information in this document. Copyright by Volkswagen AG.

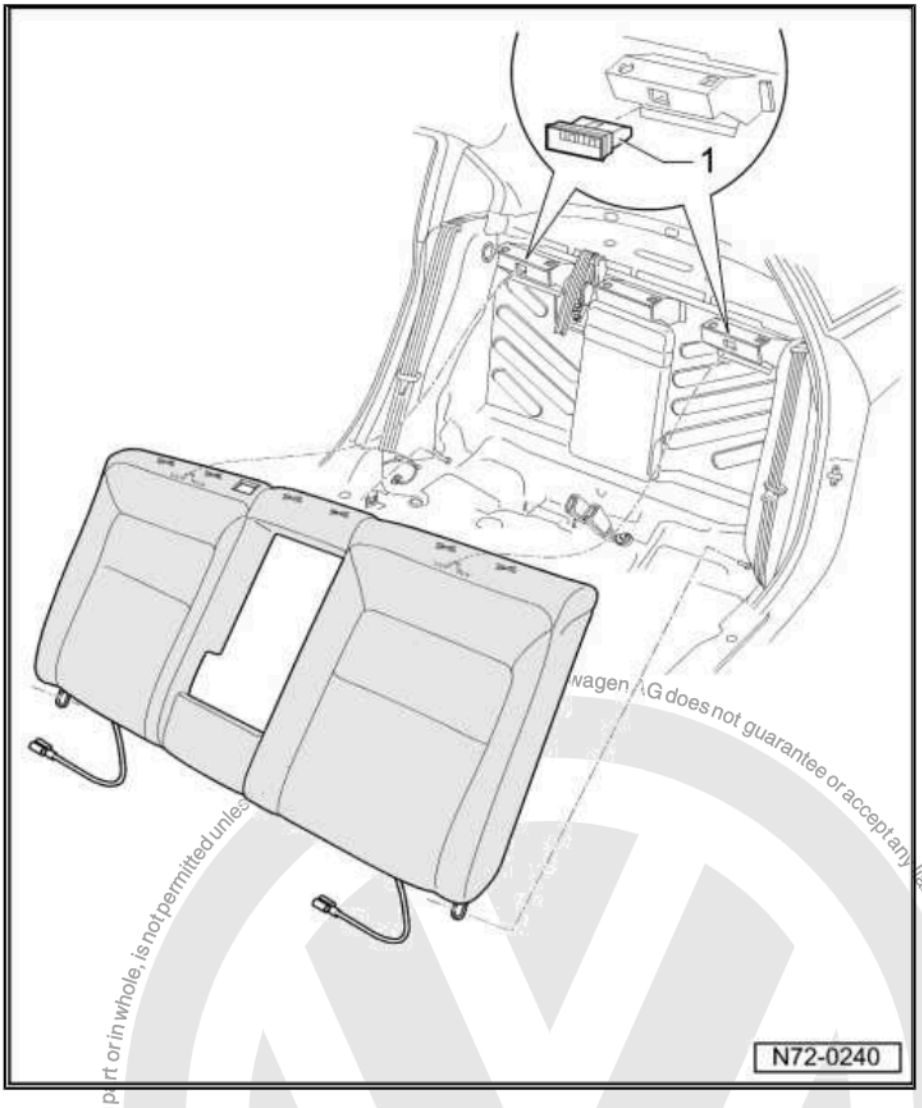

– Loosen rear seat backrest from catches in area of outer headrests.

Installing

To install, perform the steps used in removal in reverse order.

Note

Before installing rear seat backrest, replace mounting grommets -1-.

2.3.6 Left Backrest Lock

Removing

– Remove left backrest. Refer to ⇒ "2.3.4 Two-Part Rear Seat Backrest", page 204 .

– Remove left backrest cover and cushion.

Protected by copyright. Copyright by Volkswagen AG. Volkswagen AG does not guarantee or accept any liability with respect to the correctness of information in this document. Copyright by Volkswagen AG. Copying for private or commercial purposes, in part or in whole, is not permitted unless

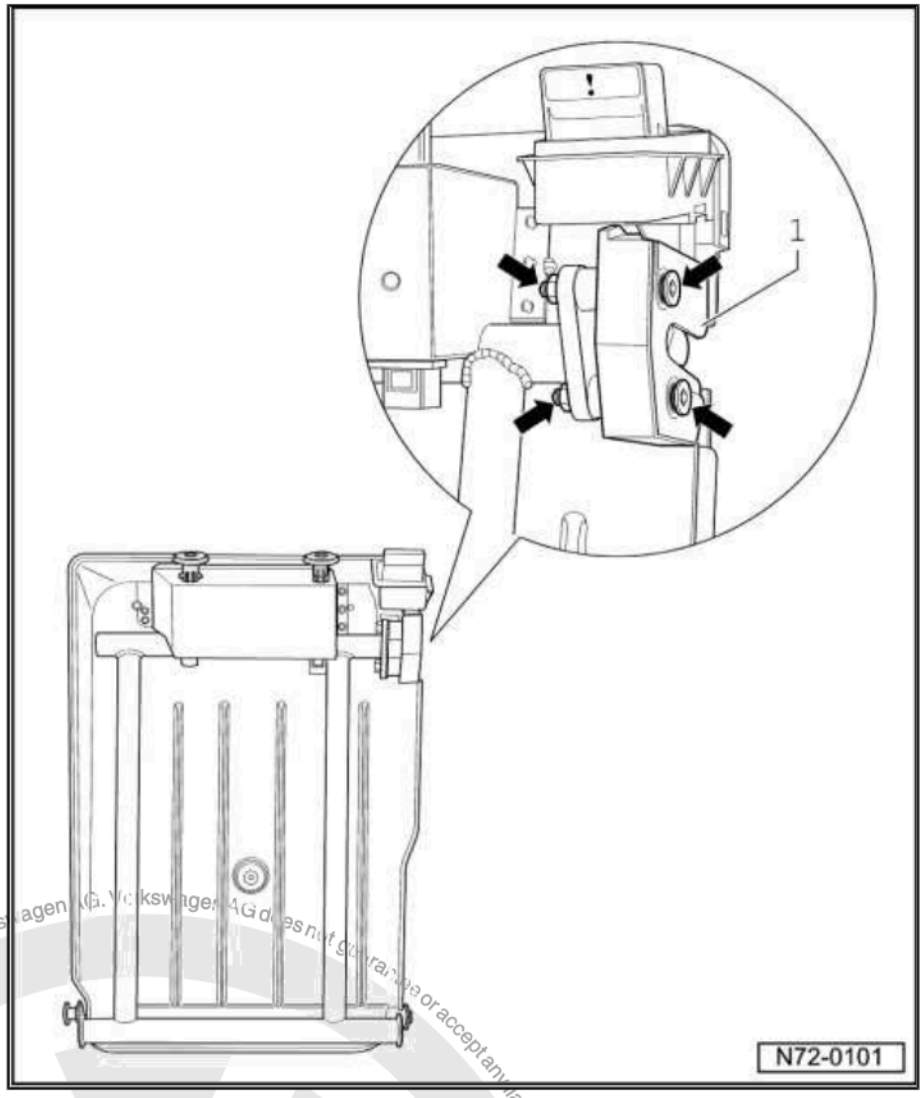

– Loosen threaded connections -arrows- and remove backrest lock -1-.

Installing

To install, perform the steps used in removal in reverse order.

Note

When installing, new self-locking nuts must be used.

2.3.7 Bench Seat, Retrofitting with Integrated Child Seat

Vehicles through 07/1998

– Remove seat bench.

Protected by copyright. Copying for private or commercial purposes, in part or in whole, is not permitted unless authorised by Volkswagen AG. Volkswagen AG does not guarantee or accept any liability with respect to the correctness of information in this document. Copyright by Volkswagen AG.

– Clip in two grommets -1-.
– Attach adapter -2- at left and right to guide -4- with bolt -3-.

Protected by copyright. Copying for private or commercial purposes, in part or in whole, is not permitted unless authorised by Volkswagen AG. Volkswagen AG does not guarantee or accept any liability with respect to the correctness of information in this document. Copyright by Volkswagen AG.

- Position the bench seat with integrated child seat into its installation position inside the vehicle.
- Mark position of holes to be created -arrows- with punch indentation.
- Remove the bench seat.
- Drill four holes -arrows- (∅ 9 mm).

Protected by copyright. Copyright by Volkswagen AG.

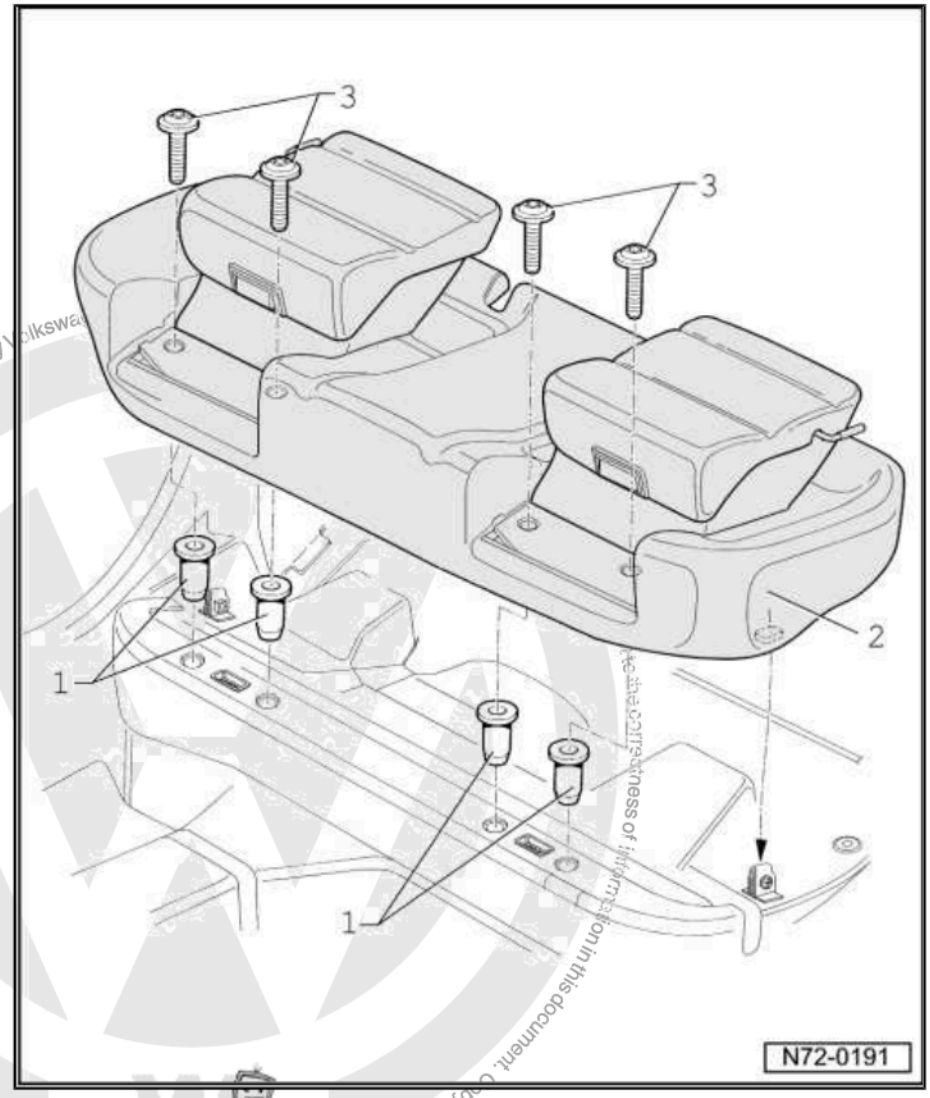

– Pull in pop rivet nuts -1- with Pop Rivet Nut Pliers - VAS5073- .
– Install the bench seat -2- and secure it with the bolts -3-.

Protected by copyright. Copying for private or commercial purposes, in part or in whole, is not permitted unless authorised by Volkswagen AG. Copyright by Volkswagen AG. We accept no liability for the correctness of information in this document.

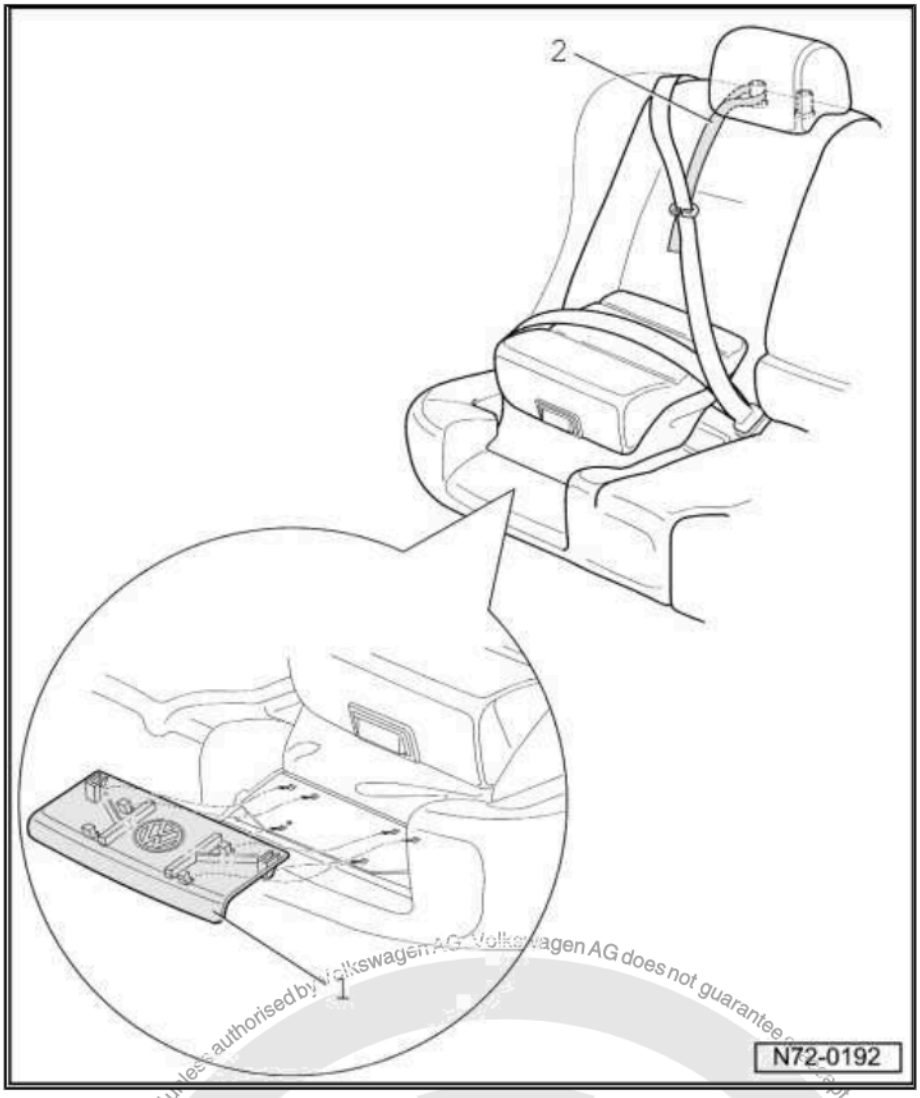

- Clip in left and right cover cap -1-.
- Remove headrests.
- Slide seatbelt guide -2- over outer headrest rod.
- Install headrests.

2.3.8 Bench Seat, Retrofitting with Integrated Child Seat

Vehicle from 08/1998

- Remove seat bench.

Protected by copyright. Copying for private or commercial purposes, in part or in whole, is not permitted unless authorised by Volkswagen AG. Volkswagen AG does not guarantee or accept any liability with respect to the correctness of information in this document. Copyright by Volkswagen AG.

– Clip in two grommets -1-.

Protected by copyright. Copying for private or commercial purposes, in part or in whole, is not permitted unless authorised by Volkswagen AG. Volkswagen AG does not guarantee or accept any liability with respect to the correctness of information in this document. Copyright by Volkswagen AG.

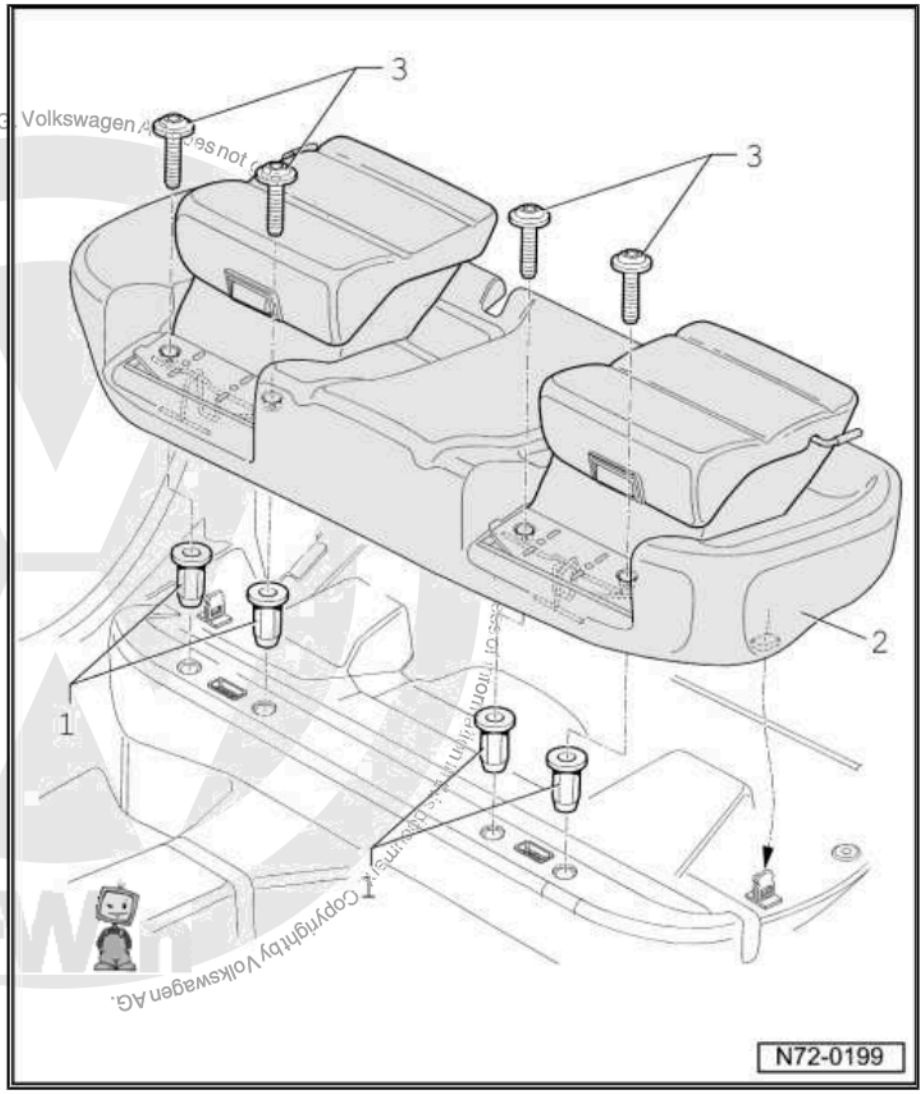

Protected by copyright. Copying for private or commercial purposes, in part or in whole, is not permitted unless authorised by Volkswagen AG. Volkswagen AG does not guarantee or accept any liability with respect to the correctness of information in this document. Copyright by Volkswagen AG.

– Pull in pop rivet nuts -1- with Pop Rivet Nut Pliers - VAS5073- .
– Install the bench seat -2- and secure it with the bolts -3-.

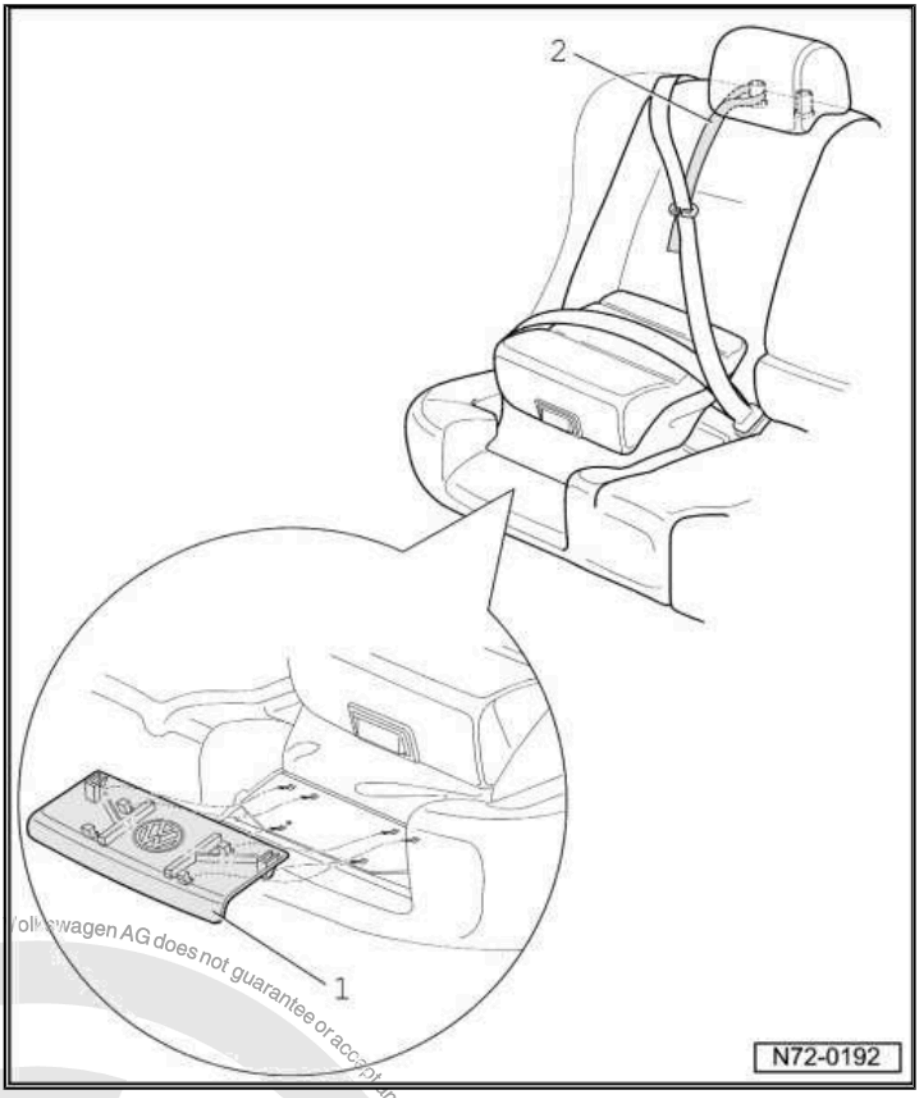

– Clip in left and right cover cap -1-.
– Remove headrests.
– Slide seatbelt guide -2- over outer headrest rod.
– Install headrests.

2.3.9 Bench Seat, Wagon, Retrofitting with Integrated Child Seat

Vehicles through 07/1998

– Remove the bench seat.

Protected by copyright. Copying for private or commercial purposes, in part or in whole, is not permitted unless authorised by Volkswagen AG. Volkswagen AG does not guarantee or accept any liability with respect to the correctness of information in this document. Copyright by Volkswagen AG.

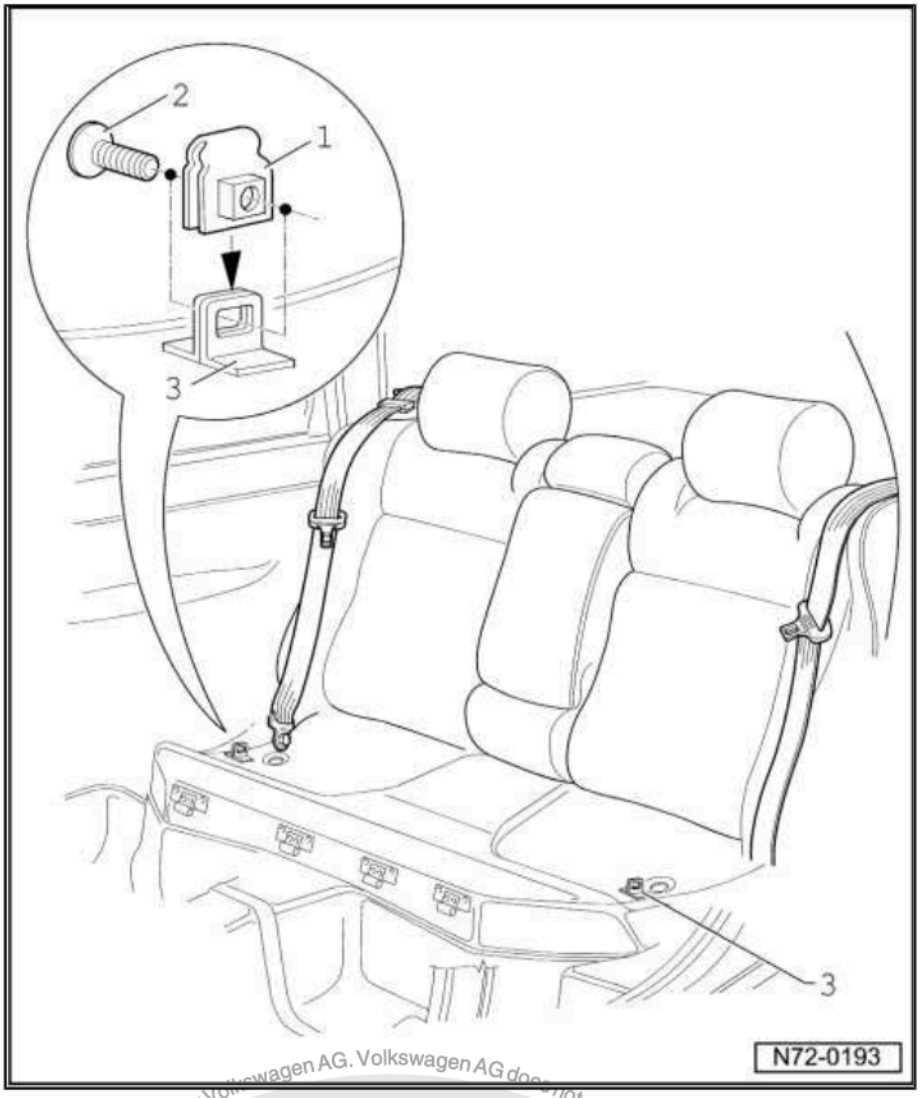

– Attach adapter -1- at left and right to guide -3- with bolt -2- (11 Nm).

Protected by copyright. Copying for private or commercial purposes, in part or in whole, is not permitted unless authorised by Volkswagen AG. Volkswagen AG does not guarantee or accept any liability with respect to the correctness of information in this document. Copyright by Volkswagen AG.

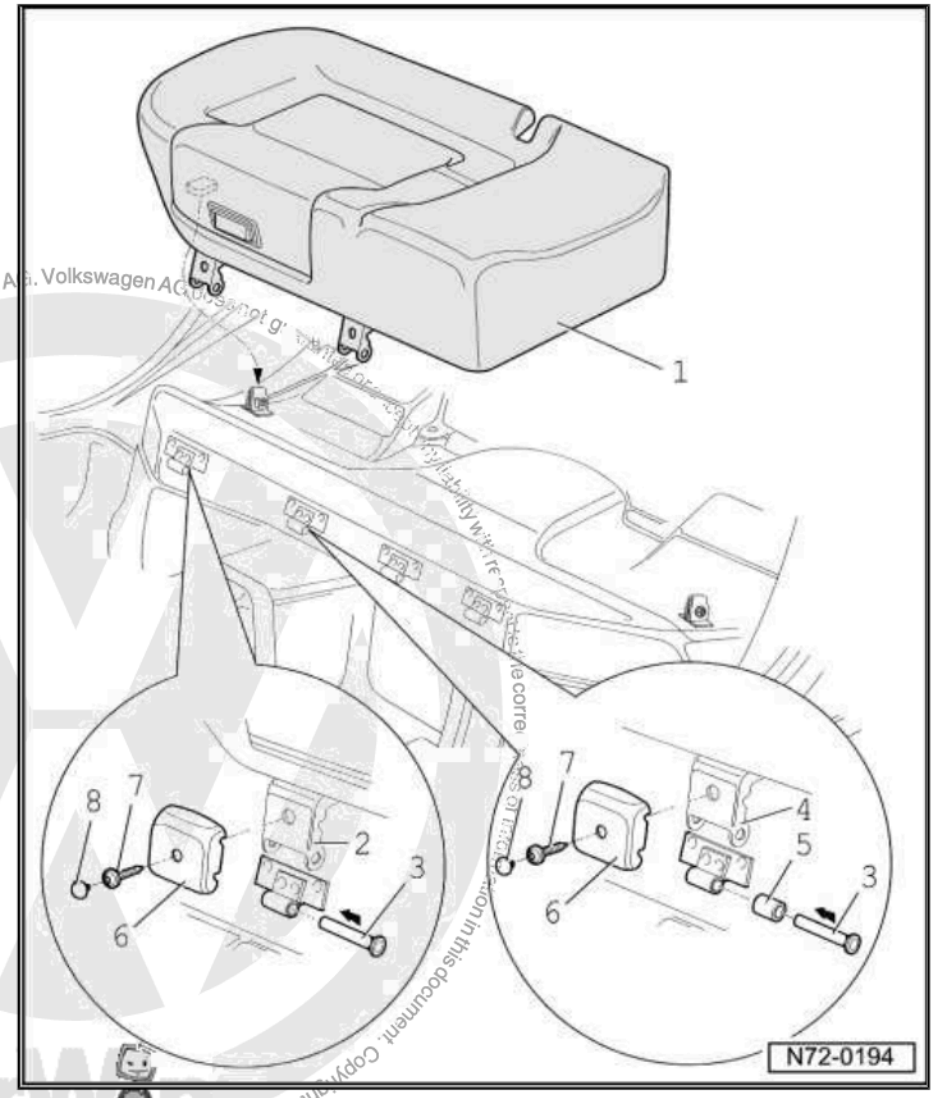

Protected by copyright. Copying for private or commercial purposes, in part or in whole, is not permitted unless authorised by Volkswagen AG. Volkswagen AG does not g

– Position the right bench seat -1- in its installation position inside the vehicle.

– Secure outer seat hinge -2- to body with pins -3-.

– Secure inner seat hinge -4- to body with spacer piece -5- and pins -3-.

– Secure cover caps -6- with bolts -7- (2.7 Nm) to seat hinges -2- and -4-.

– Place cover caps -8- on bolts -7-.

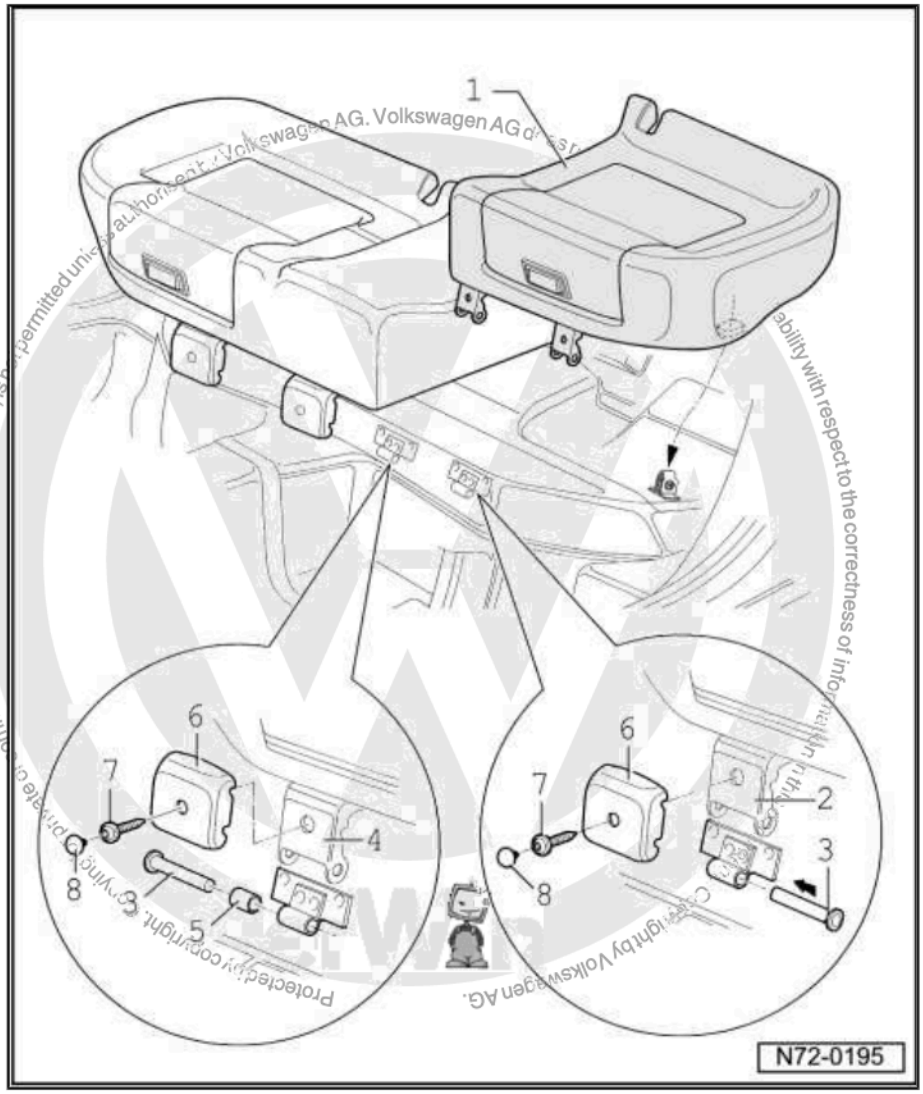

- Position the left bench seat -1- in its installation position inside the vehicle.
- Secure outer seat hinge -2- to body with pins -3-.
- Secure inner seat hinge -4- to body with spacer piece -5- and pins -3-.
- Secure cover caps -6- with bolts -7- (2.7 Nm) to seat hinges -2- and -4-.
- Place cover caps -8- on bolts -7-.

- Remove headrests.
- Slide seatbelt guide -1- over outer headrest rod.
- Install headrests.

2.3.10 Bench Seat, Wagon, Retrofitting with Integrated Child Seat

Vehicle from 08/1998

Protected by copyright. Copying for private or commercial purposes, in part or in whole, is not permitted unless authorised by Volkswagen AG. Volkswagen AG does not guarantee or accept any liability with respect to the correctness of information in this document. Copyright by Volkswagen AG.

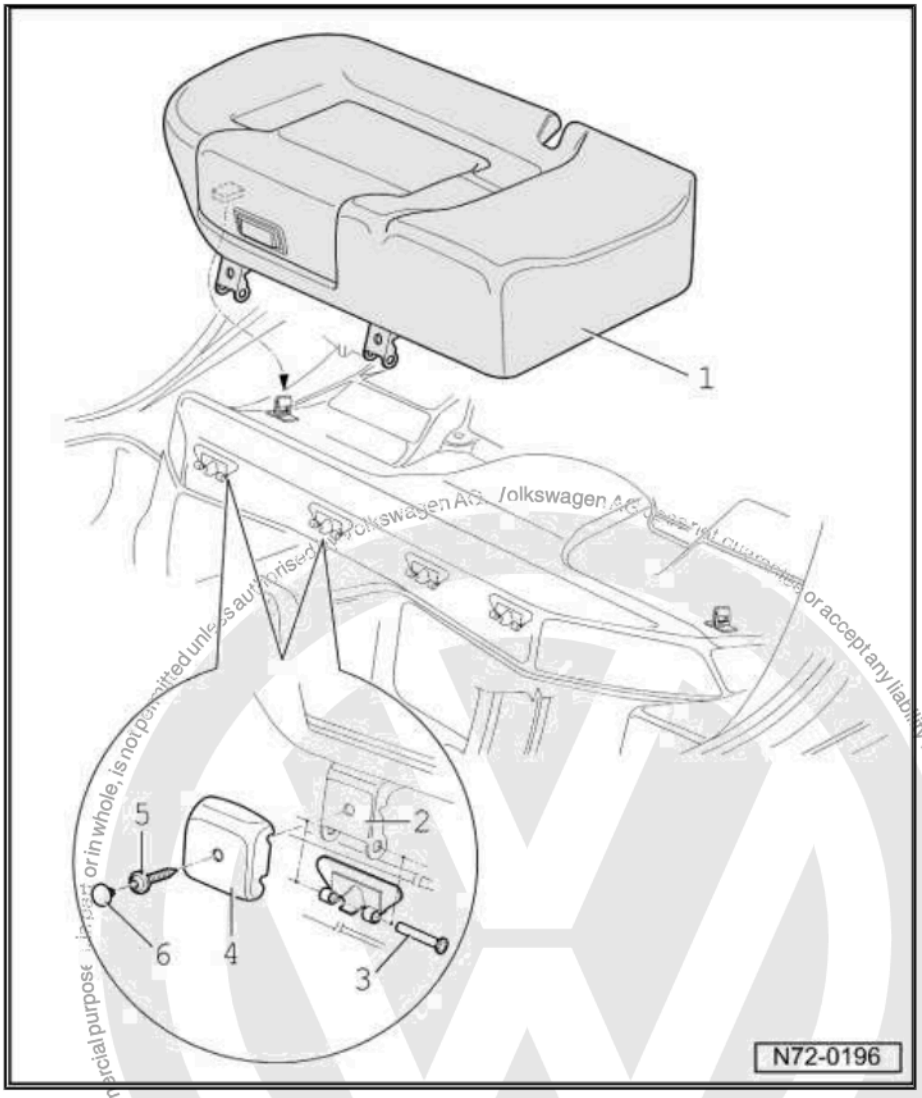

- Remove the bench seat.
- Position the right bench seat -1- in its installation position inside the vehicle.
- Secure seat hinge -2- to body with pins -3-.
- Secure cover caps -4- to seat hinges -2- with bolts -5- (2.7 Nm).
- Place cover caps -6- on bolts -5-.

Protected by copyright. Copying for private or commercial purposes, in part or in whole, is not permitted unless authorised by Volkswagen AG. Volkswagen AG does not guarantee or accept any liability with respect to the correctness of information in this document. Copyright by Volkswagen AG.

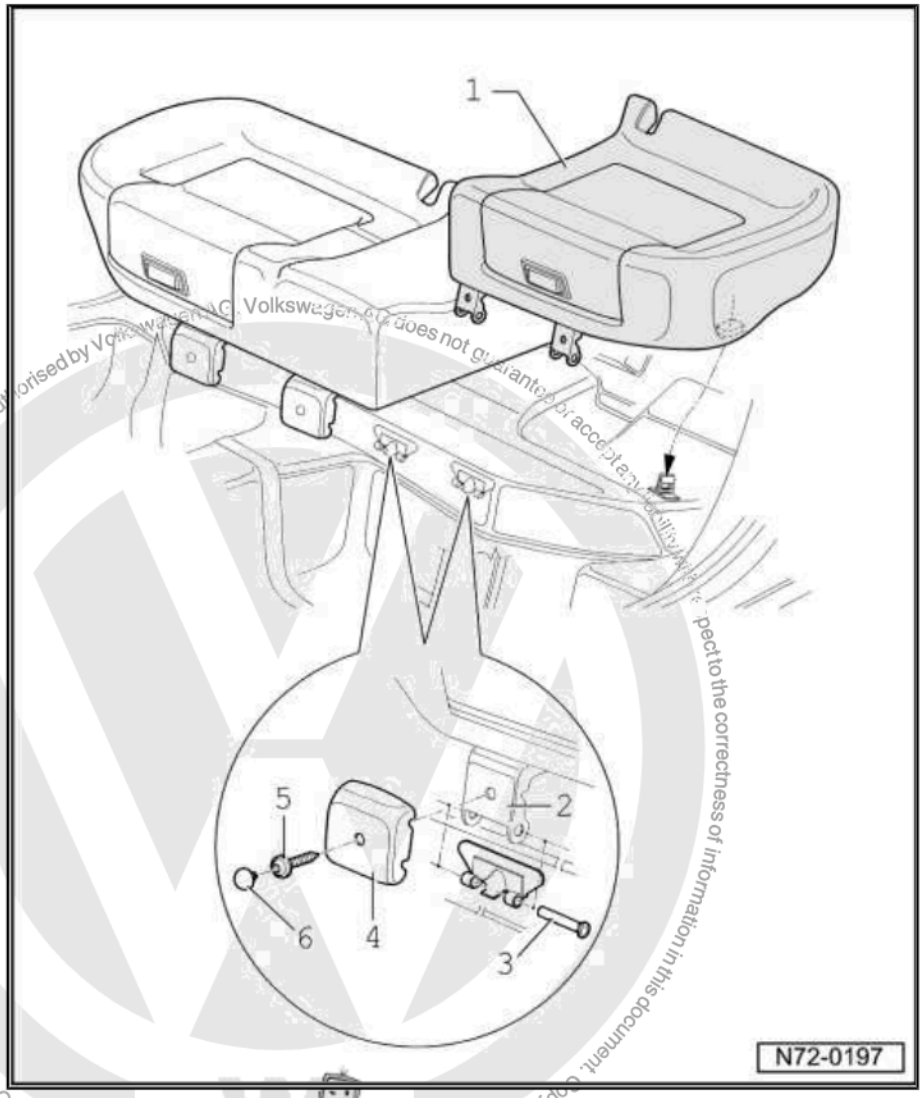

Protected by copyright. Copyright by Volkswagen AG.
Volkswagen AG, Volkswagen AG does not guarantee or accept any liability with respect to the correctness of information in this document. Copyright by Volkswagen AG.
Protected by copyright. Copyright for private or commercial purposes, in part or in whole, is not permitted unless authorised by Volkswagen AG.

- Position the left bench seat -1- in its installation position inside the vehicle.
- Secure seat hinge -2- to body with pins -3-.
- Secure cover caps -4- to seat hinges -2- with bolts -5- (2.7 Nm).
- Place cover caps -6- on bolts -5-.

Protected by copyright. Copyright by Volkswagen AG. Volkswagen AG does not guarantee or accept any liability with respect to the correctness of information in this document. Copyright by Volkswagen AG. Volkswagen AG, in part or in whole, is not permitted unless authorised by Volkswagen AG. Volkswagen AG does not guarantee or accept any liability with respect to the correctness of information in this document. Copyright by Volkswagen AG.

– Remove headrests.
– Slide seatbelt guide -1- over outer headrest rod.
– Install headrests.

2.3.11 Child Seat Bracket Retrofitting, Bobsy G1 ISOFIX

Note

To secure Votex child seat -Bobsy G1 ISOFIX- in vehicle, a bracket (replacement part no. 8D0 813 545) must be retrofitted.

– Remove seat bench.

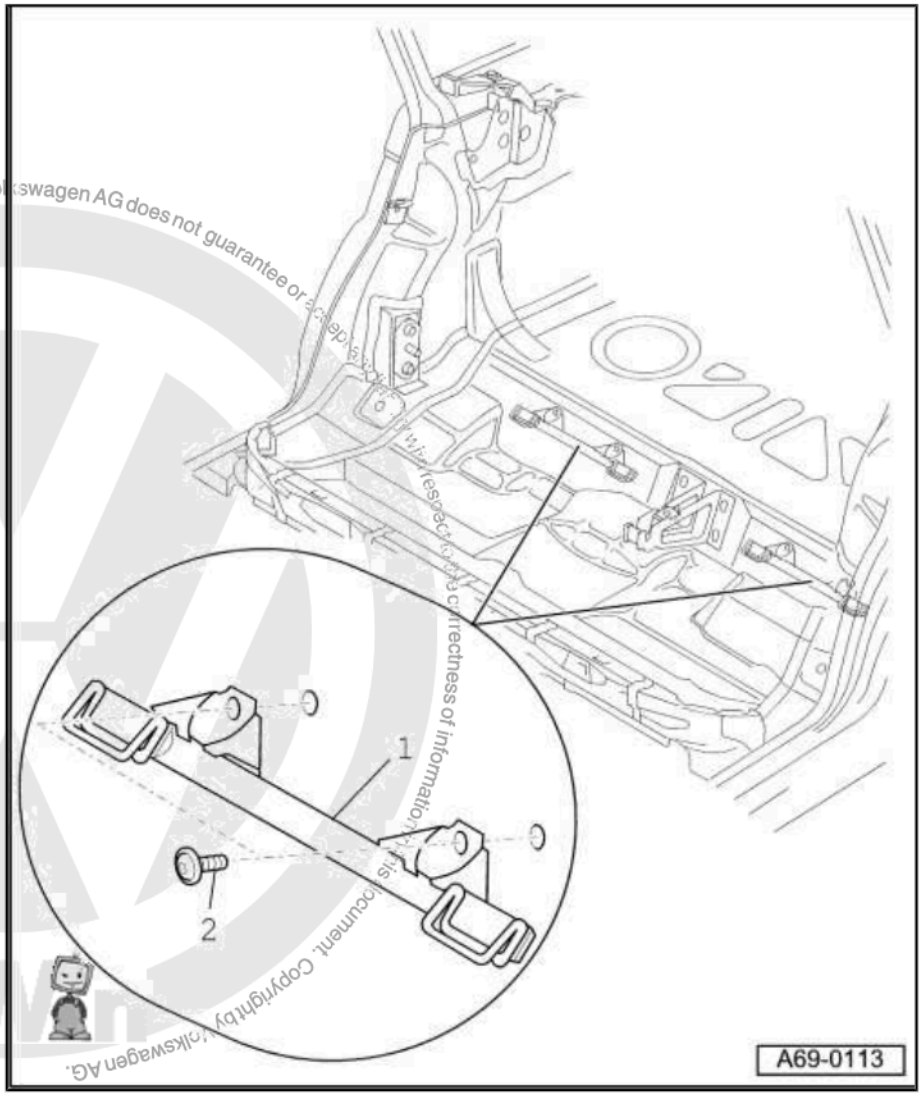

Protected by copyright. Copying for private or commercial purposes, in part or in whole, is not permitted unless authorised by Volkswagen AG. Volkswagen AG does not guarantee or accept any liability with respect to the correctness of information in this document. Copyright by Volkswagen AG.

– Secure bracket -1- with bolts -2-.

3 Special Tools

Special tools and workshop equipment required

- Pop Rivet Nut Pliers - VAS5073-
- Airbag Lockout Adapter - VAS5094-

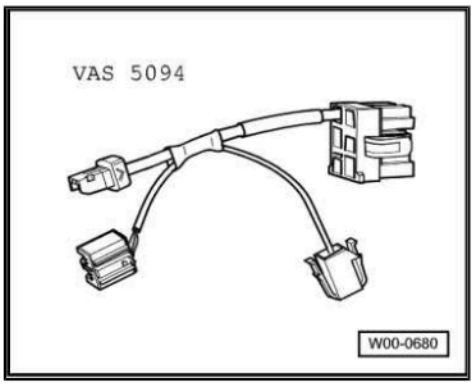

- Airbag Lockout Adapter - VAS5232/1-

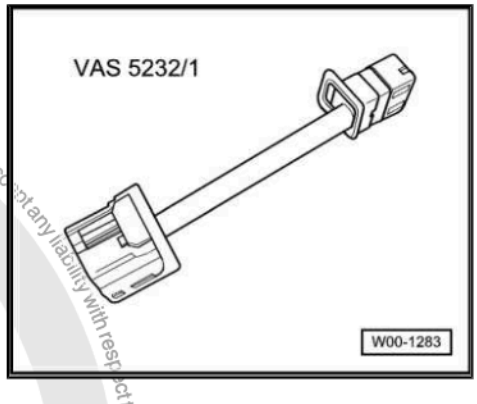

Protected by copyright. Copying for private or commercial purposes, in part or in whole, is not permitted unless authorised by Volkswagen AG. Volkswagen AG does not guarantee or accept any liability with respect to the correctness of information in this document. Copyright by Volkswagen AG.

74 – Seat Upholstery, Covers

1 Removal and Installation

⇒ “1.1 Front Seat Covers and Cushion”, page 229
⇒ “1.2 Recaro Seat, Covers and Cushions”, page 236
⇒ “1.3 Rear Seat Covers and Cushion”, page 241
⇒ “1.4 Seat Heating Elements”, page 252

1.1 Front Seat Covers and Cushion

⇒ “1.1.1 Front Seat Cover and Cushion”, page 229
⇒ “1.1.2 Front Backrest Cover and Cushion”, page 231

1.1.1 Front Seat Cover and Cushion

Removing

– Remove seat. Refer to ⇒ “2.1.1 Front Seat”, page 161 .
– Remove backrest. Refer to ⇒ “2.1.2 Front Backrest”, page 164 .

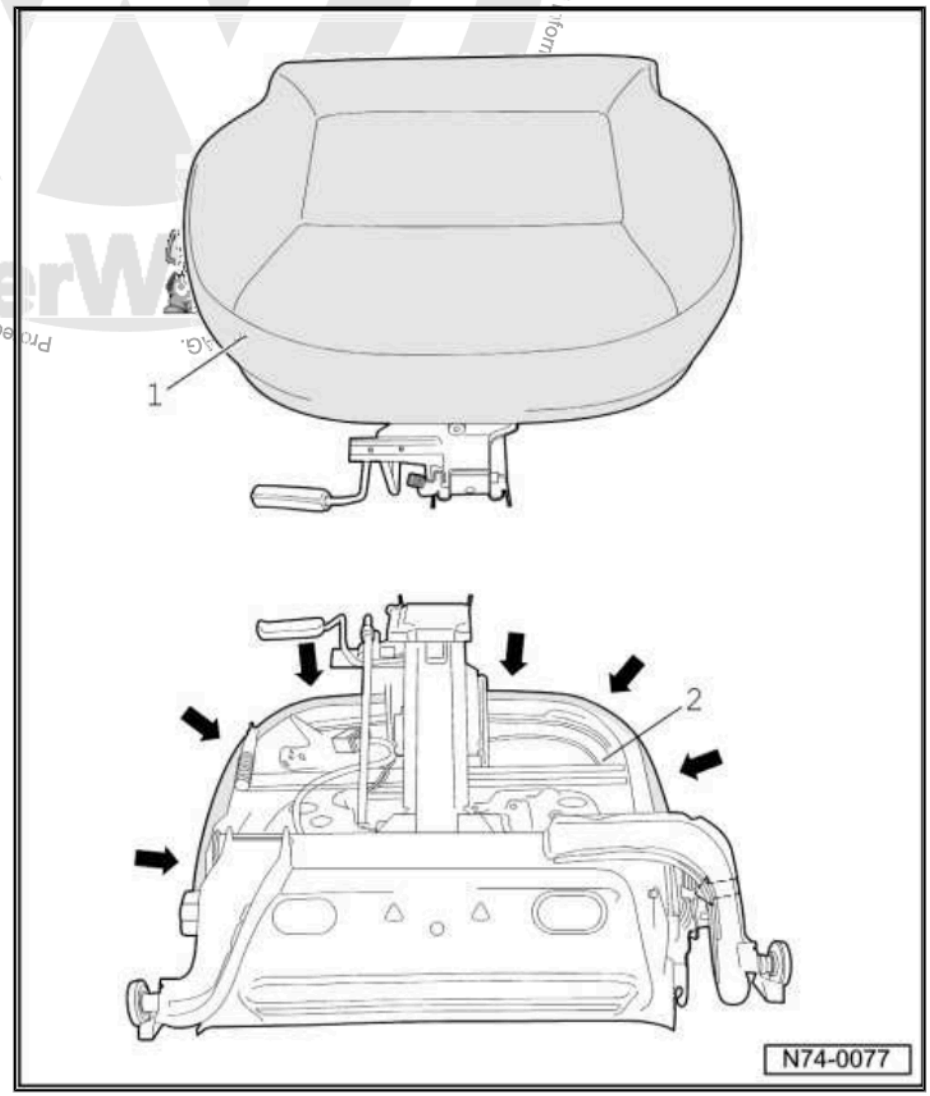

Protected by copyright. Copying for private or commercial purposes, in part or in whole, is not permitted unless authorised by Volkswagen AG. Volkswagen AG does not guarantee or accept any liability with respect to the correctness of information

– Pull off cover -1- from seat frame -2- -arrows-.

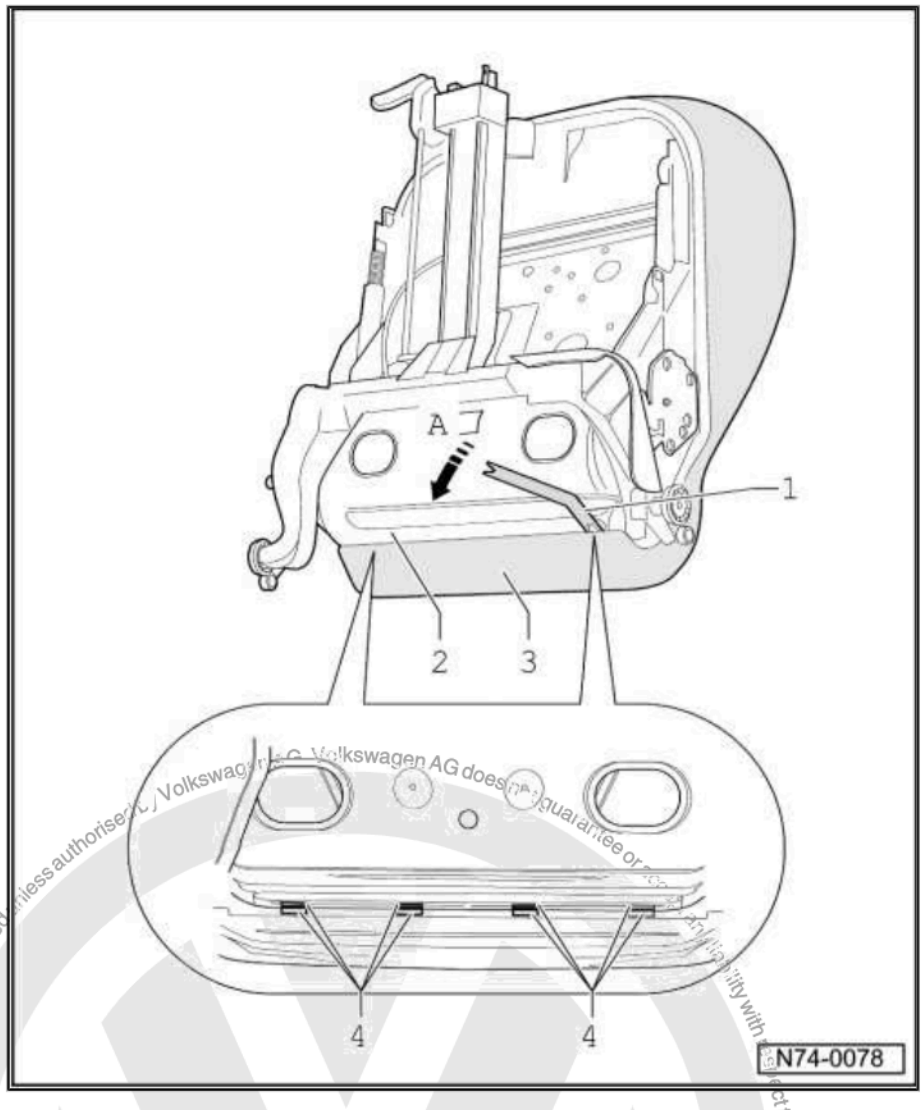

– Guide Pry Lever - 80-200- -1- between seat frame -2- and cover -3- and press apart locking lugs -4- -arrow A-.

– Remove cover -3- and cushion from seat frame -2-.

Protected by copyright. Copying for private or commercial purposes, in part or in whole, is not permitted unless authorised. © Volkswagen AG. Volkswagen AG does not guarantee or accept any liability with respect to the correctness of information in this document. Copyright by Volkswagen AG.

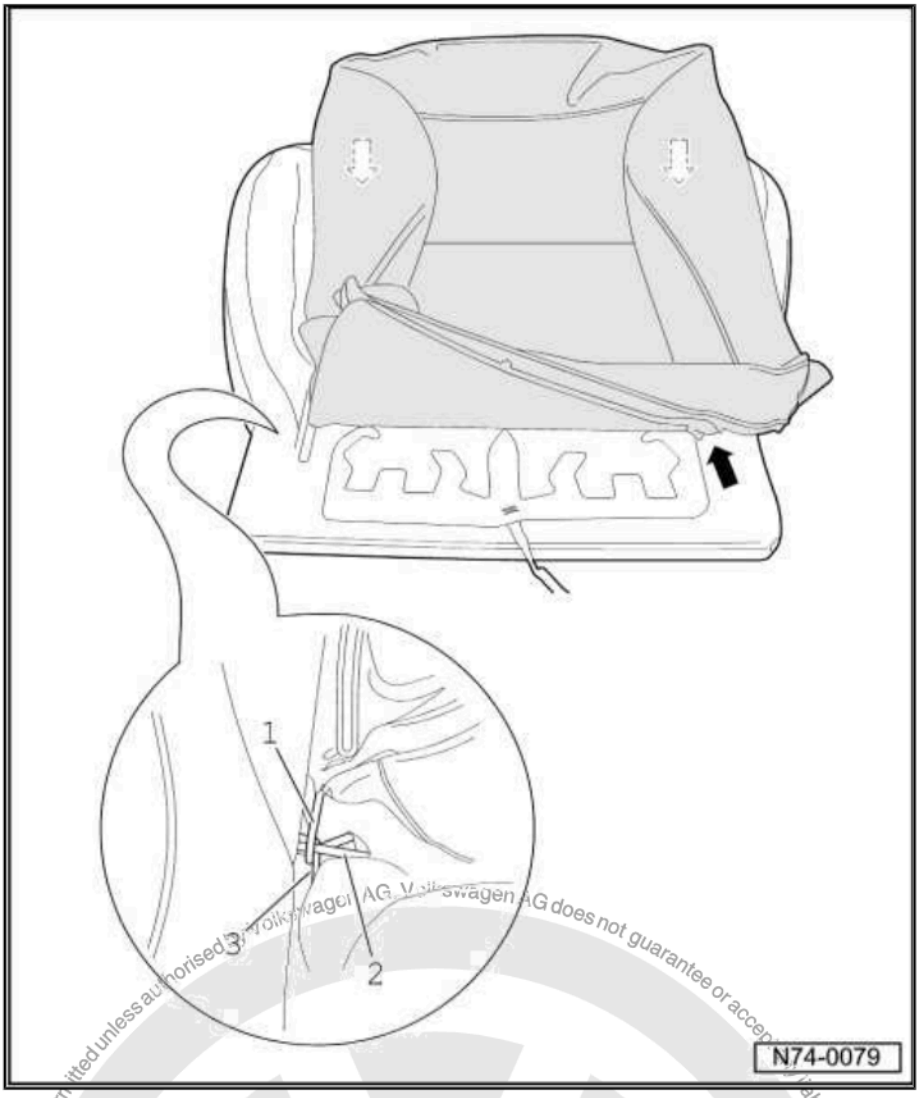

– Loosen wires -1- and -2- from cushion wire -3- -arrows-.
– Remove cover.

Installing

To install, perform the steps used in removal in reverse order.

1.1.2 Front Backrest Cover and Cushion

Removing

- Headrests and guides removed
– Remove seat.
– Remove backrest. Refer to ⇒ “2.1.2 Front Backrest”, page 164 .

Protected by copyright. Copying for private or commercial purposes, in part or in whole, is not permitted unless authorised by Volkswagen AG. Volkswagen AG does not guarantee or accept any liability with respect to the correctness of information in this document. Copyright by Volkswagen AG.

Protected by copyright. Copying for private or commercial purposes, in part or in whole, is not permitted unless authorised by Volkswagen AG. Volkswagen AG does not guarantee or accept any liability with respect to the correctness of in
Copyright by Volkswagen AG.

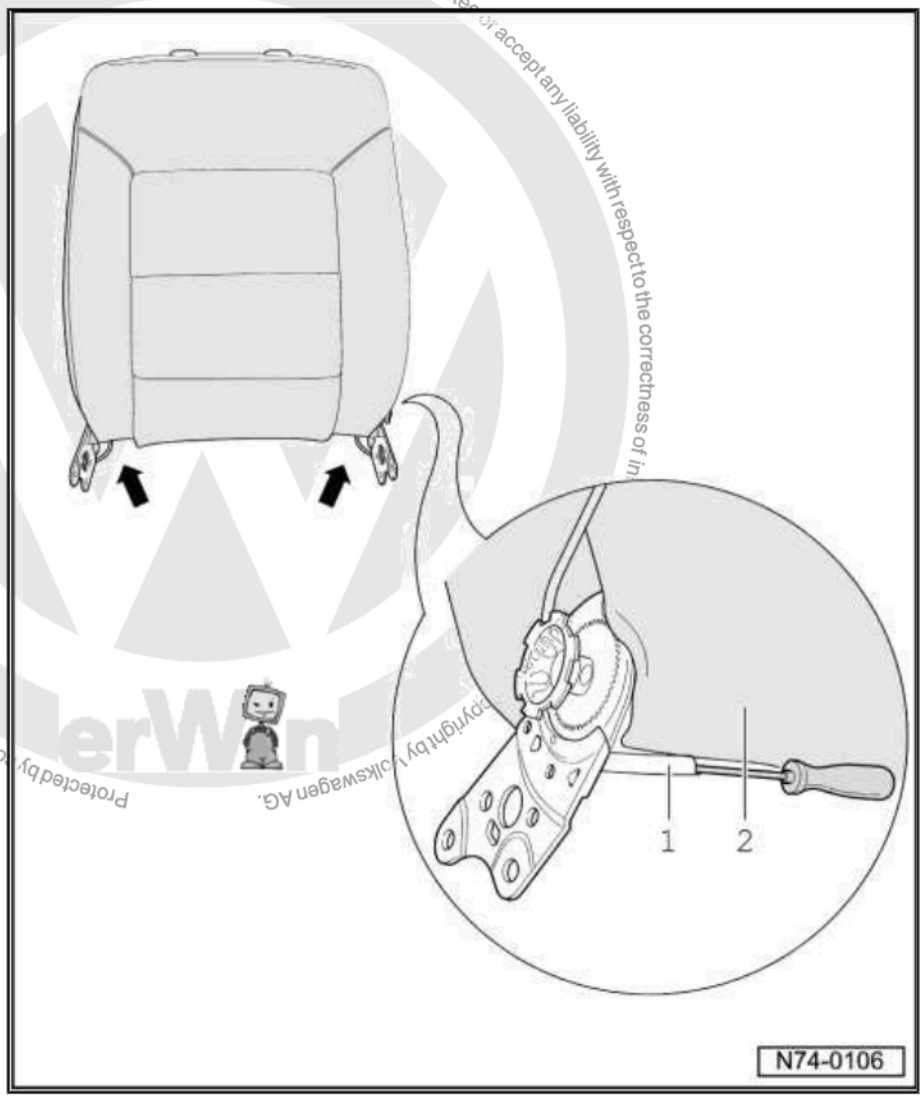

– Separate beading strip -1- for cover -2- using a screwdriver -arrows-.

Protected by copyright. Copying for private or commercial purposes, in part or in whole, is not permitted unless authorised by Volkswagen AG. Volkswagen AG does not guarantee

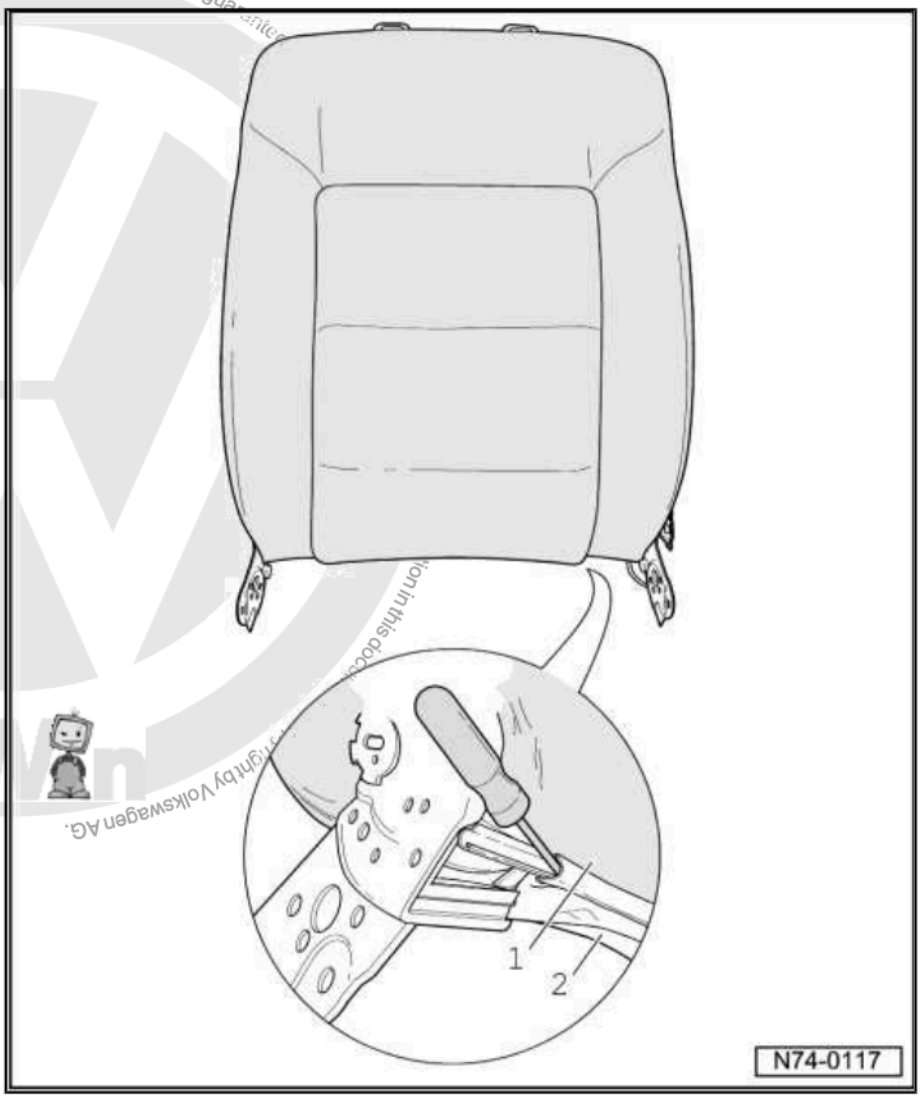

– Separate cover piece -1- from center cover piece -2- with screwdriver.

– Pry out adjustment knob -1- and collar -2-.

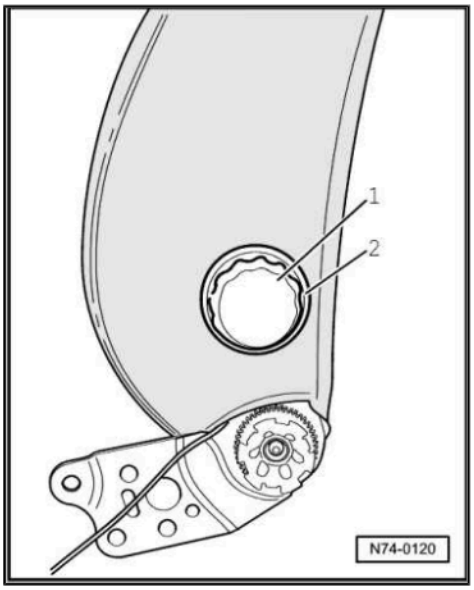

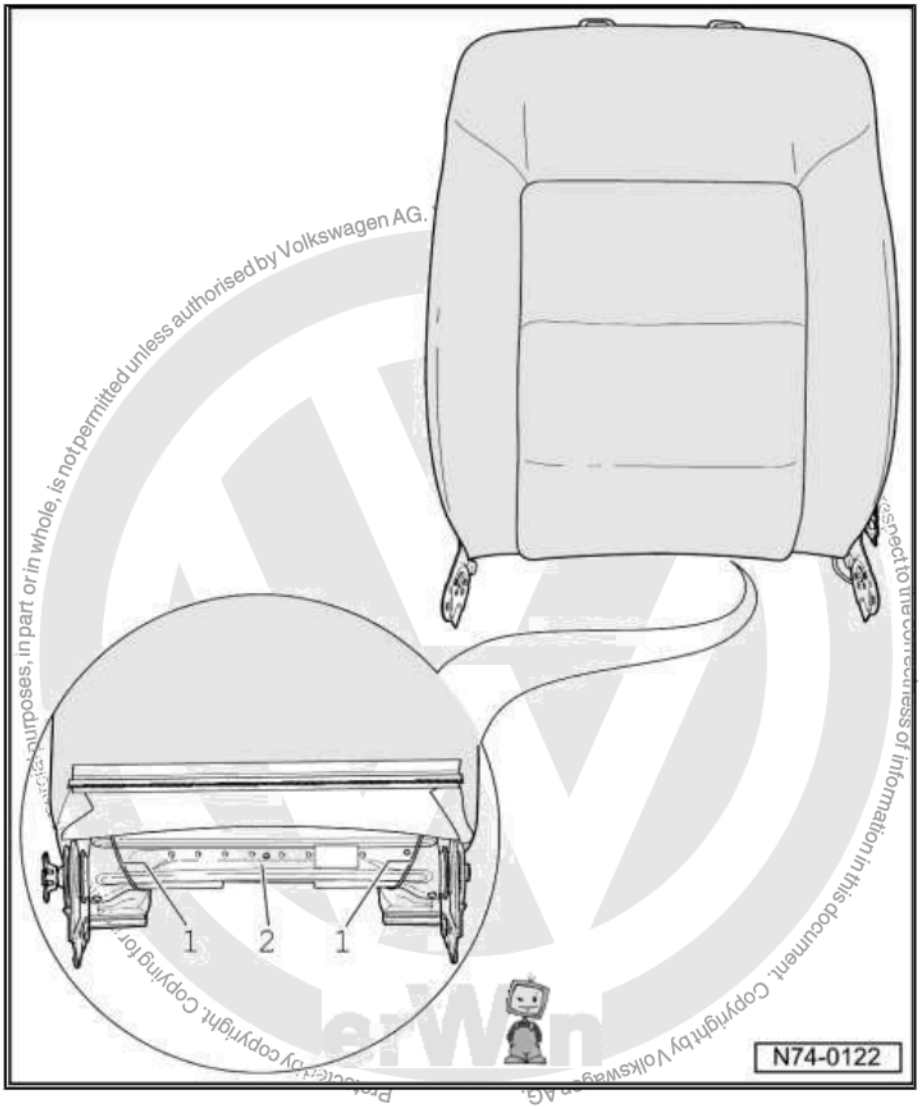

– Remove tension wires -1- from backrest frame -2-.

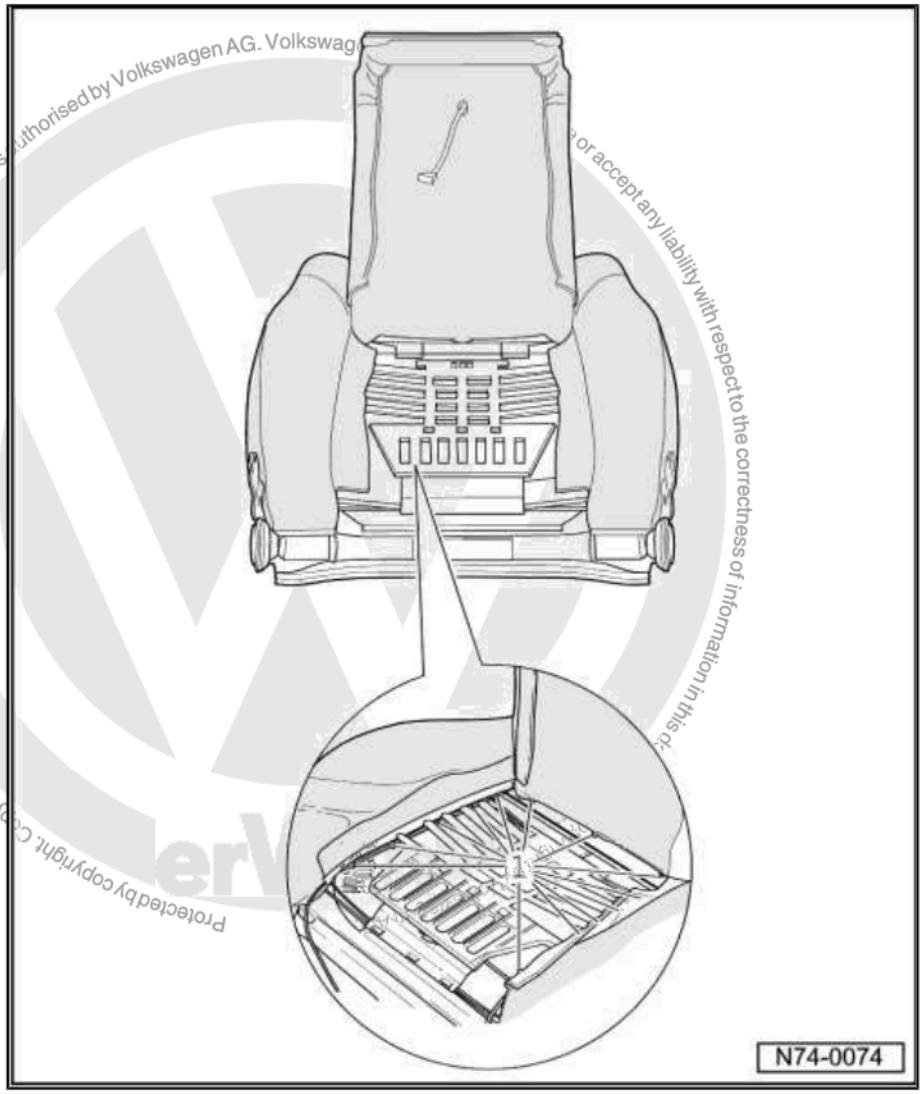

Protected by copyright. Copying for private or commercial purposes, in part or in whole, is not permitted unless authorised by Volkswagen AG. Volkswagen AG does not guarantee or accept any liability with respect to the correctness of information in this document.

- Cut through cushion clips -1-.
- Loosen cover -1- from center part of cushion -2- -arrows-.
- Pull cover -1- upward over cushion.

Installing

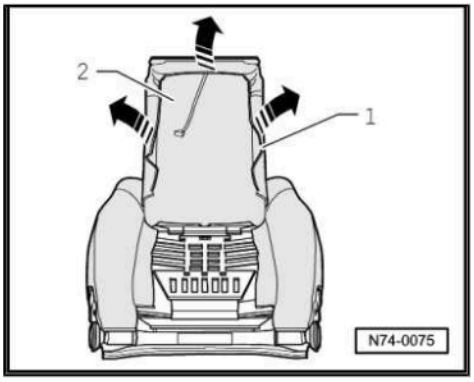

To install, perform the steps used in removal in reverse order.

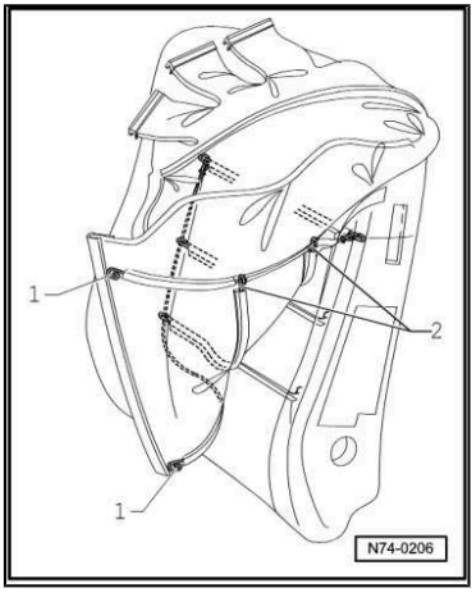

Note

- *Before installing backrest cover, check whether two tension wires -1- are present.*
- *One or two cushion wires -2- must be present, depending on seat version.*

1.2 Recaro Seat, Covers and Cushions

⇒ “1.2.1 Seat Area Cover and Cushions”, page 236

⇒ “1.2.2 Seat Surface Extension Cover and Cushion”, page 237

⇒ “1.2.3 Backrest Cover and Cushion”, page 238

⇒ “1.2.4 Headrest Cover and cushion”, page 240

1.2.1 Seat Area Cover and Cushions

Removing

– Remove Recaro seat. Refer to ⇒ “2.2.1 Recaro Seats”, page 177

– Remove seat surface extension. Refer to ⇒ “2.2.3 Seat Cushion Extension”, page 181

– Remove trim, backrest mounting bracket. Refer to ⇒ “2.2.2 Backrest Hinge Trim”, page 179

– Remove spring cover. Refer to ⇒ “2.2.4 Spring Cover”, page 183

– Remove seat area. Refer to ⇒ “2.2.5 Seat Area”, page 184

Protected by copyright. Copying for private or commercial purposes, in part or in whole, not permitted unless authorised by Volkswagen AG. Volkswagen AG does not guarantee or accept any liability with respect to the correctness of information in this document. Copyright by Volkswagen AG.

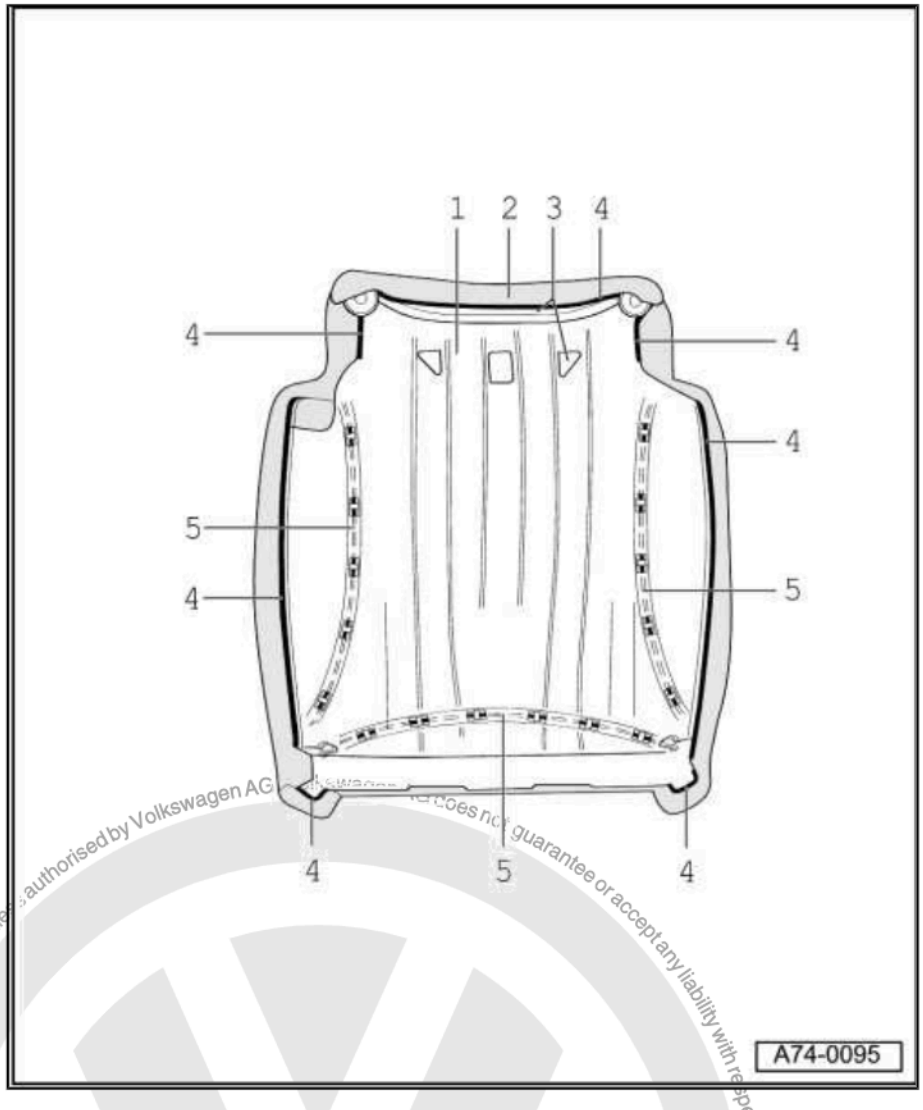

– Disconnect wiring harness in vehicles with seat heater.
– Remove cover profile from seven mounts -4- on outer edge of seat area -1-.
– Disengage cover retaining strips from mounts -5- in seat area.
– Remove cushion -3- and cover -2- from seat area.
– Remove cover from cushion.

Installing

To install, perform the steps used for removal in reverse order.

1.2.2 Seat Surface Extension Cover and Cushion

Removing

– Remove Recaro seat. Refer to ⇒ "2.2.1 Recaro Seats", page 177
– Remove seat surface extension. Refer to ⇒ "2.2.3 Seat Cushion Extension", page 181

Protected by copyright. Copyright by Volkswagen AG.

Protected by copyright. Copying for private or commercial purposes, in part or in whole, is not permitted unless authorised by Volkswagen AG. Volkswagen AG does not guarantee or accept any liability with respect to the correctness of in

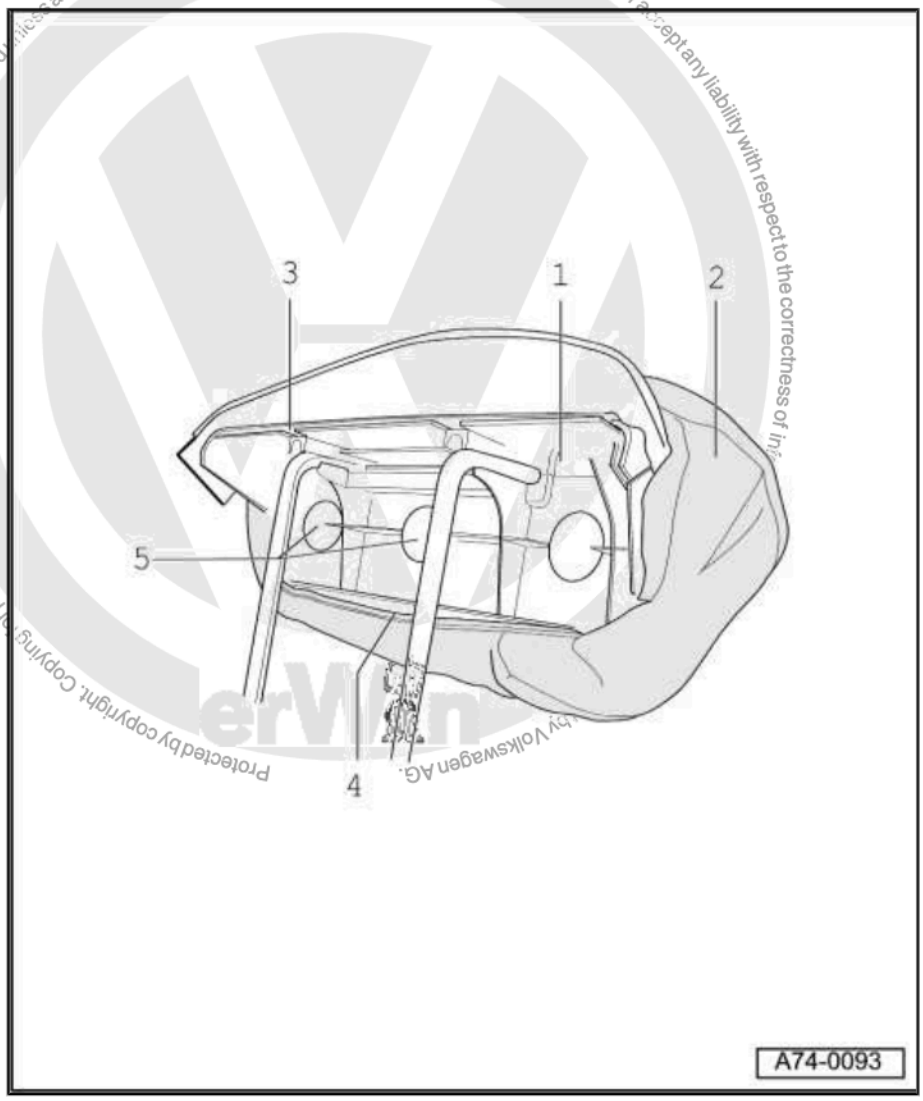

– Pry clamping profile -4- out of mount -3-.
– Remove cover -2- from seat surface extension -1-.
– Remove cushion -5- from seat surface extension.

Installing

To install, perform the steps used for removal in reverse order.

1.2.3 Backrest Cover and Cushion

Removing

– Remove Recaro seat. Refer to ⇒ “2.2.1 Recaro Seats”, page 177
– Remove belt buckle. Refer to ⇒ “4.1.1 Belt Buckle”, page 56
– Remove trim, backrest mounting bracket. Refer to ⇒ “2.2.2 Backrest Hinge Trim”, page 179
– Remove seat side trim. Refer to ⇒ “2.2.6 Seat Side Trim”, page 186
– Remove backrest. Refer to ⇒ “2.2.7 Backrest”, page 187
– Remove side airbag. Refer to ⇒ “4.3 Driver Side and Passenger Side Curtain Airbag, Recaro Seat”, page 65

– Press head rest release button and remove head rest from backrest.

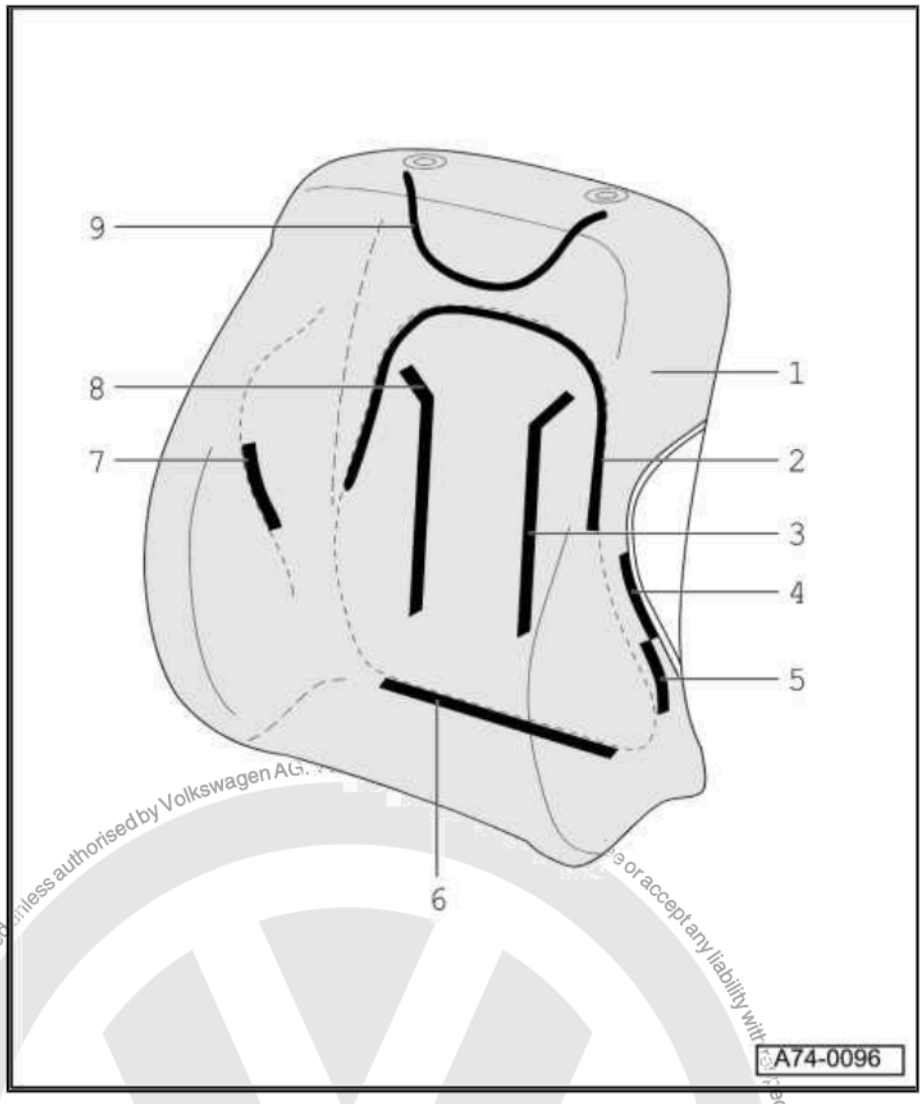

– Pry cover clamping profile -6- out of mount, clamping profile side clips -6- must be replaced when installing.
– Disengage profiles -5- and -7- on both sides of backrest.
– Disengage the two profiles -3-.
– Pry clamping profile -2- out of mount, clips on clamping profile must be replaced when installing.
– Disengage profile -4-.
– Roll cover and pull it upward.
– Disengage backrest profiles -8- on both sides.
– Remove headrest guides from backrest.
– Disconnect cushion and cover -1- from backrest frame.
– Remove cover clamping profile -9- from cushion.

Installing

To install, perform the steps used for removal in reverse order.

Protected by copyright. Copying for private or commercial purposes, in part or in whole, is not permitted unless authorised by Volkswagen AG. Volkswagen AG does not guarantee or accept any liability with respect to the correctness of information in this document. Copyright by Volkswagen AG.

1.2.4 Headrest Cover and cushion

Removing

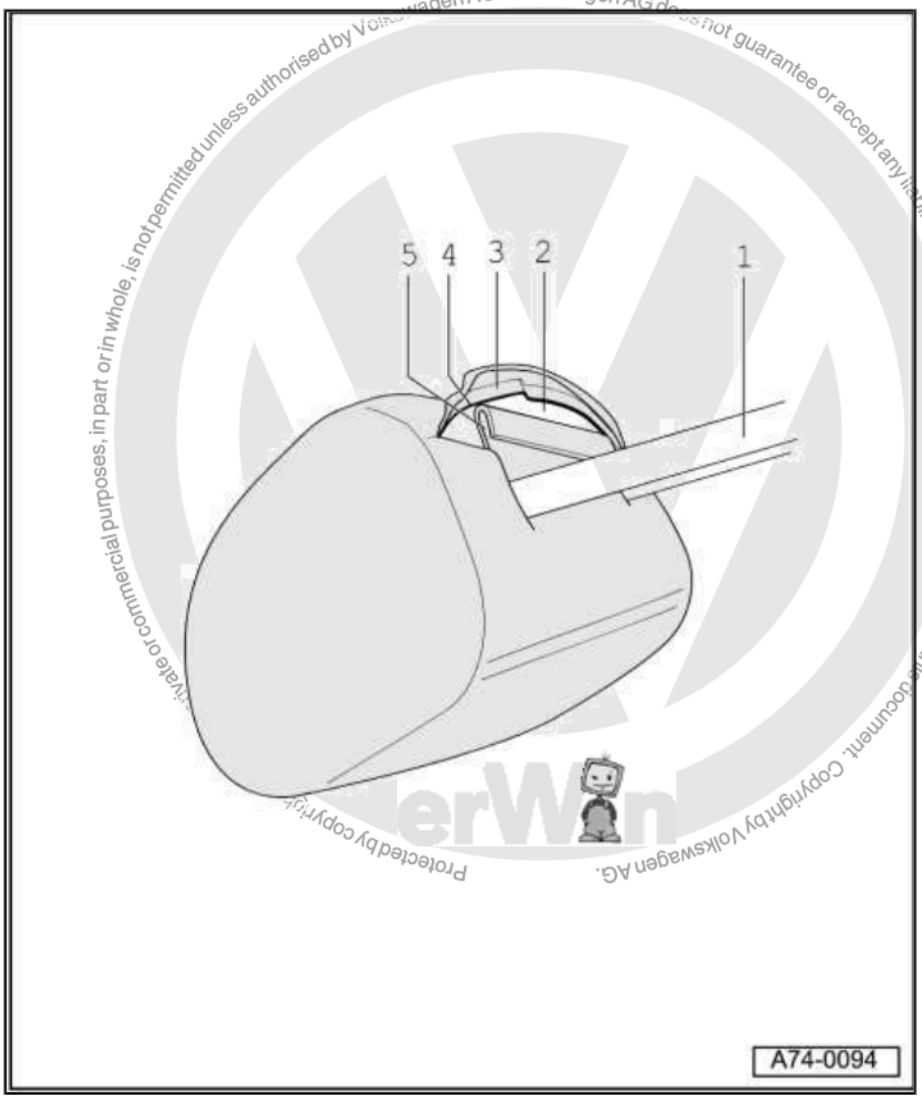

Protected by copyright. Copyright by Volkswagen AG. Volkswagen AG. Volkswagen AG does not guarantee or accept any liability with respect to the correctness of information in this document. Copyright by Volkswagen AG. Private or commercial purposes, in part or in whole, is not permitted unless authorised by Volkswagen AG.

- Press head rest release button and remove head rest from backrest.
- Pry clamping profile -4- out of mount -5-.
- Fold cover -3- and remove it from headrest.
- Remove cushion -2- from support -1-.

Installing

To install, perform the steps used for removal in reverse order.

1.3 Rear Seat Covers and Cushion

⇒ “1.3.1 Bench Seat Cover”, page 241
⇒ “1.3.2 Center Armrest”, page 244
⇒ “1.3.3 Center Armrest Cover”, page 246
⇒ “1.3.4 Right Backrest Cover”, page 248

1.3.1 Bench Seat Cover

Removing

– Remove seat bench.

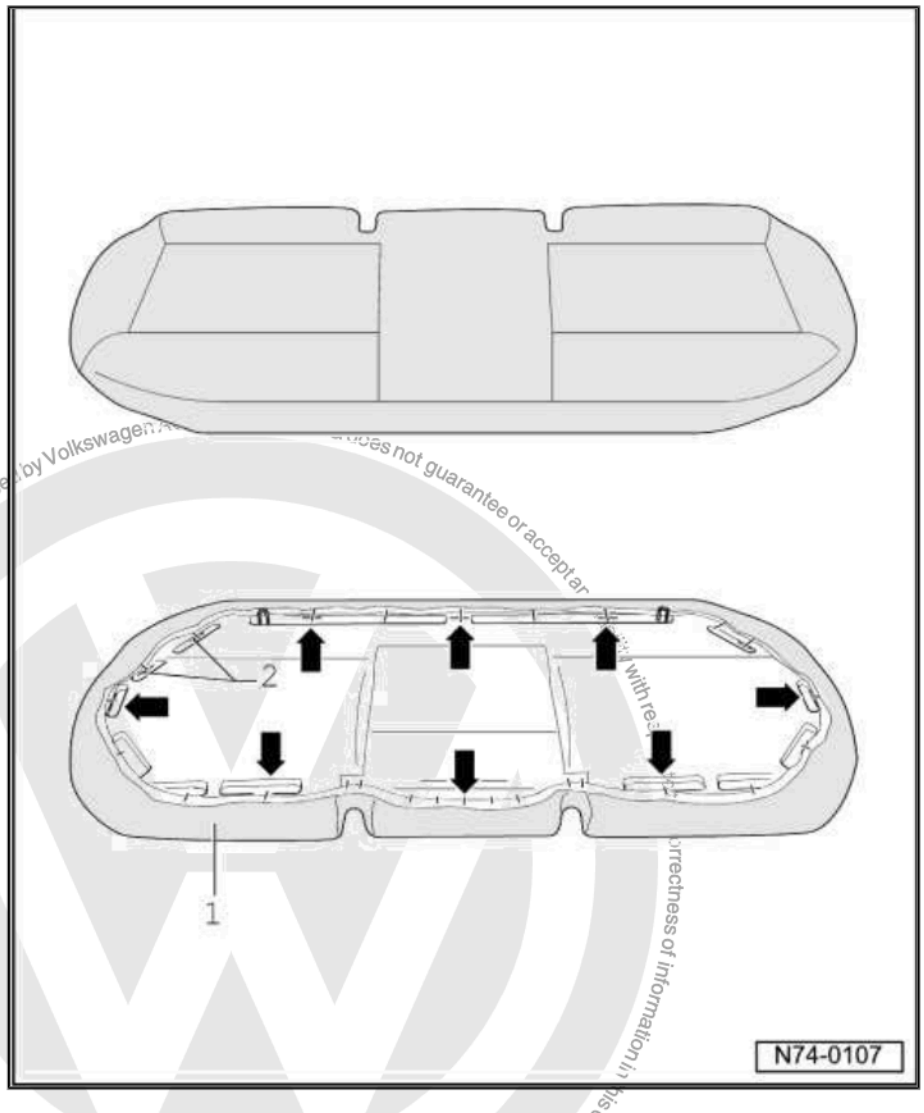

– Loosen cover -1- from cushion wire -2- -arrows-.

Protected by copyright. Copying for private or commercial purposes, in part or in whole, is not permitted unless authorised by Volkswagen AG. Volkswagen AG does not guarantee or accept any liability with respect to the correctness of information in this document. Copyright by Volkswagen AG.

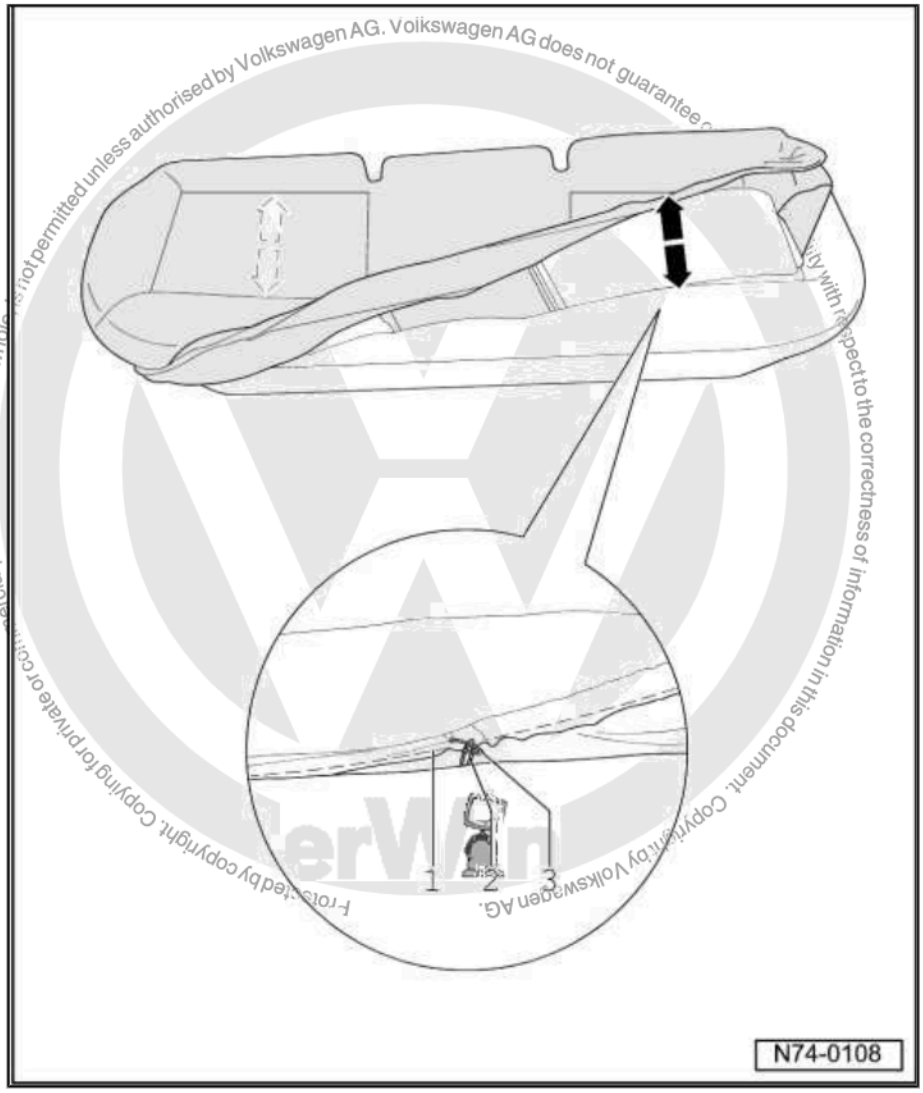

Protected by copyright. Copying for private or commercial purposes, in part or in whole, is not permitted unless authorised by Volkswagen AG. Volkswagen AG does not guarantee or assume any liability with respect to the correctness of information in this document. Copyright by Volkswagen AG.

– Cut through all cushion clips -3- and loosen cushion wire -1- from cushion -2-.

– Remove cover from cushion -arrows-.

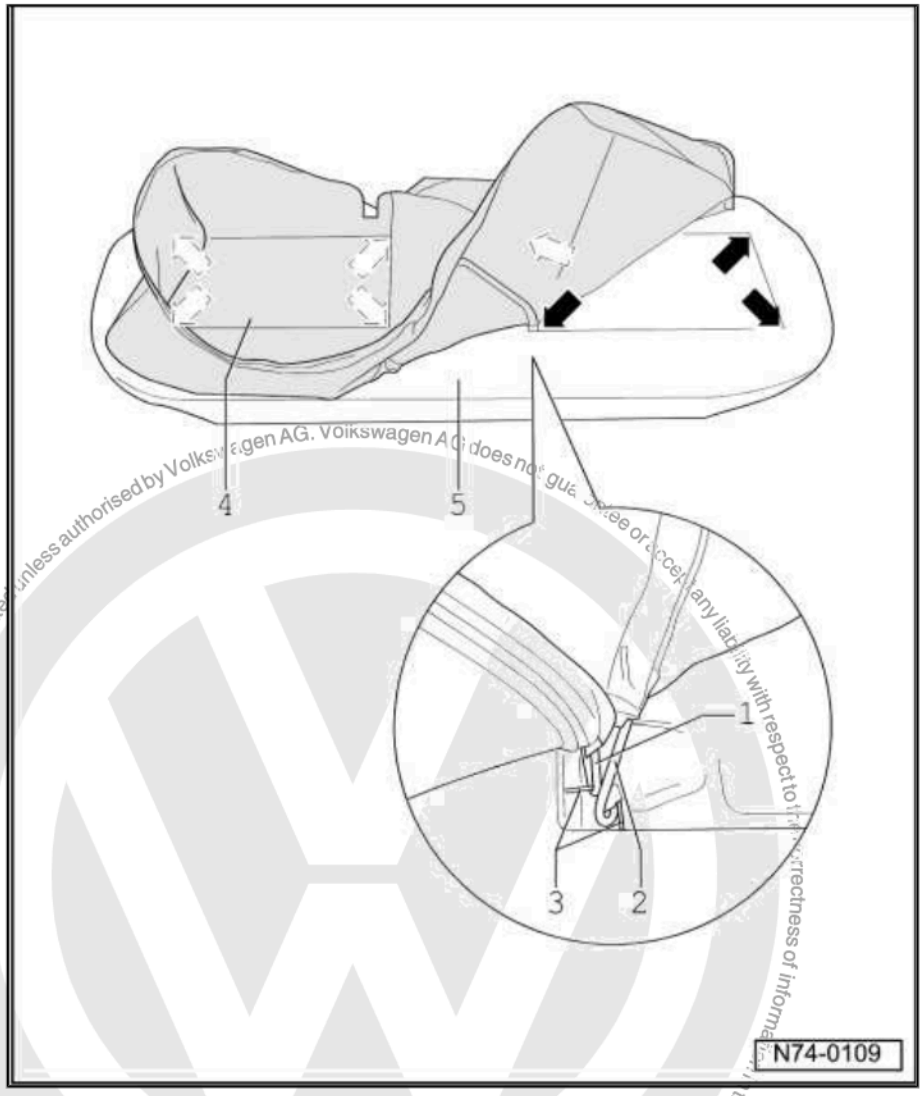

Protected by copyright. Copyright by Volkswagen AG. Volkswagen AG does not guarantee or accept any liability with respect to the correctness of information in this document. Copyright by Volkswagen AG. Volkswagen AG, is not permitted unless authorised by Volkswagen AG, in part or in whole, is not permitted for commercial purposes, in part or in whole, is not permitted for private or commercial purposes.

– Loosen tension wires -1- and -2- from cushion wire -3- -arrows-.
– Remove cover -4- from cushion -5-.

Installing

To install, perform the steps used in removal in reverse order.

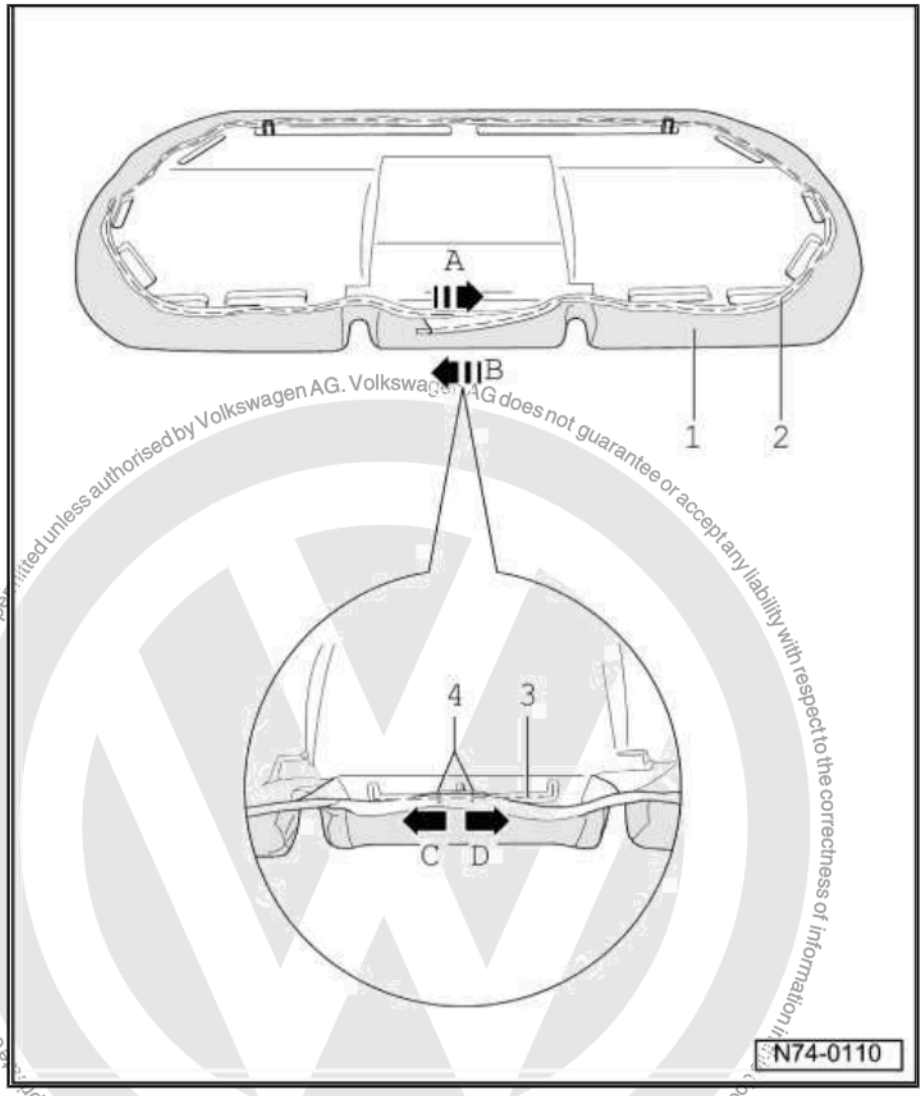

Protected by copyright. Copying for private or commercial purposes, in part or in whole, is not permitted unless authorised by Volkswagen AG. Volkswagen AG does not guarantee or accept any liability with respect to the correctness of information in this document. Copyright by Volkswagen AG.

– When securing cover -1-, guide wire -2- must be pulled taut, arrows -A- and -B-, and cushion wire -3- secured with cushion clips -4-.

– Secure cover -1- all around arrows -C- and -D-.

1.3.2 Center Armrest

Removing

– Remove right backrest. Refer to
⇒ “2.3.4 Two-Part Rear Seat Backrest”, page 204 .

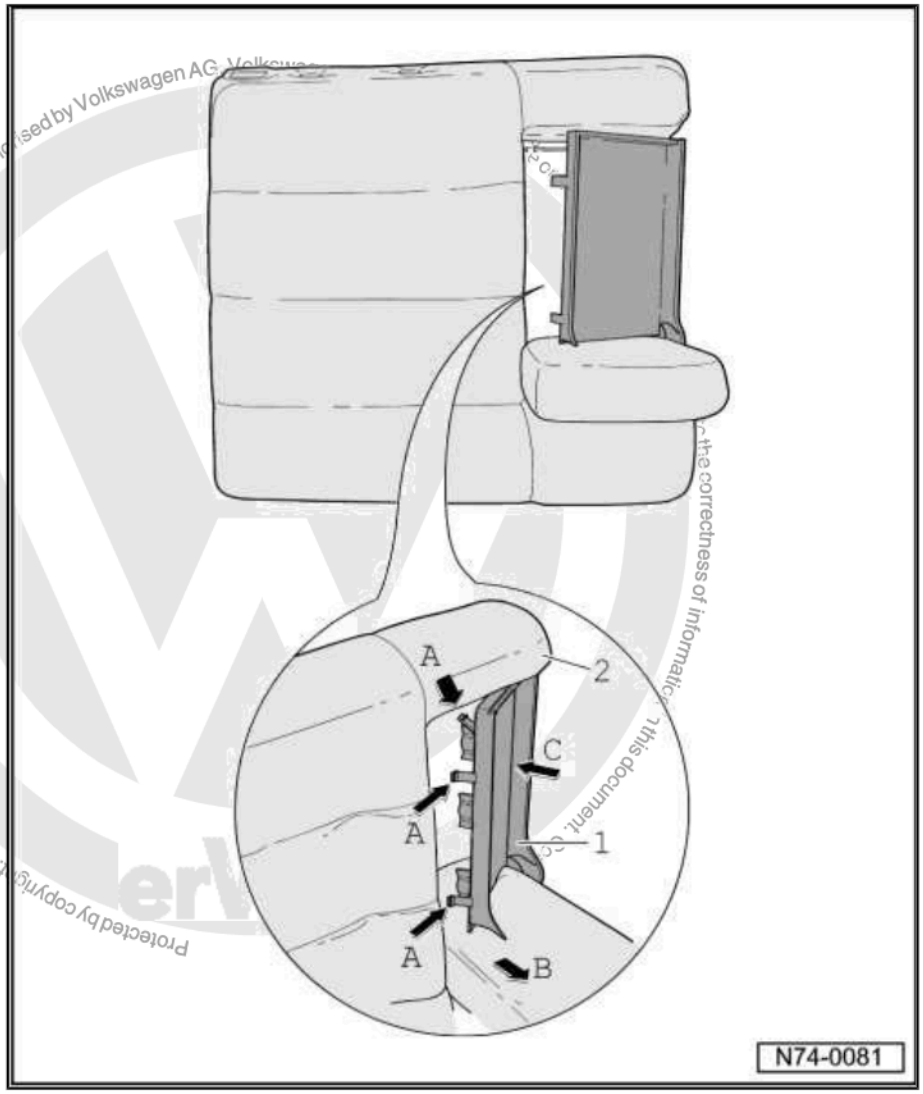

Protected by copyright. Copying for private or commercial purposes, in part or in whole, is not permitted unless authorised by Volkswagen AG. Volkswagen AG does not guarantee the correctness of information in this document.

– Push locking tabs in -A- arrows and pull trim -1- out of backrest -2- arrow -B-.

– Remove trim -1- from backrest arrow -C-.

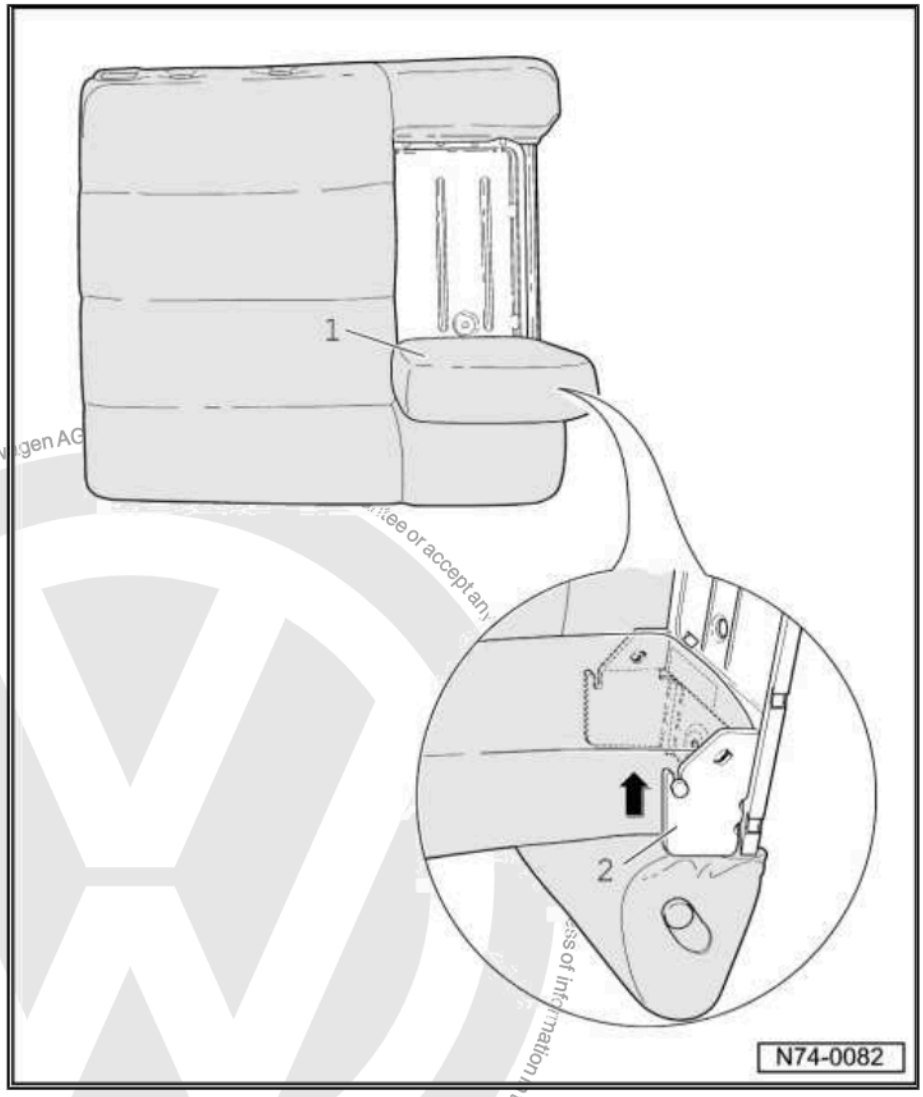

– Pull center armrest -1- out of retainers -2- -arrow-.

Installing

To install, perform the steps used in removal in reverse order.

1.3.3 Center Armrest Cover

Removing

– Remove right backrest. Refer to
⇒ “2.3.4 Two-Part Rear Seat Backrest”, page 204 .

– Remove center arm rest.

Copyright by Volkswagen AG. Copying for private or commercial purposes, in part or in whole, is not permitted unless authorised by Volkswagen AG

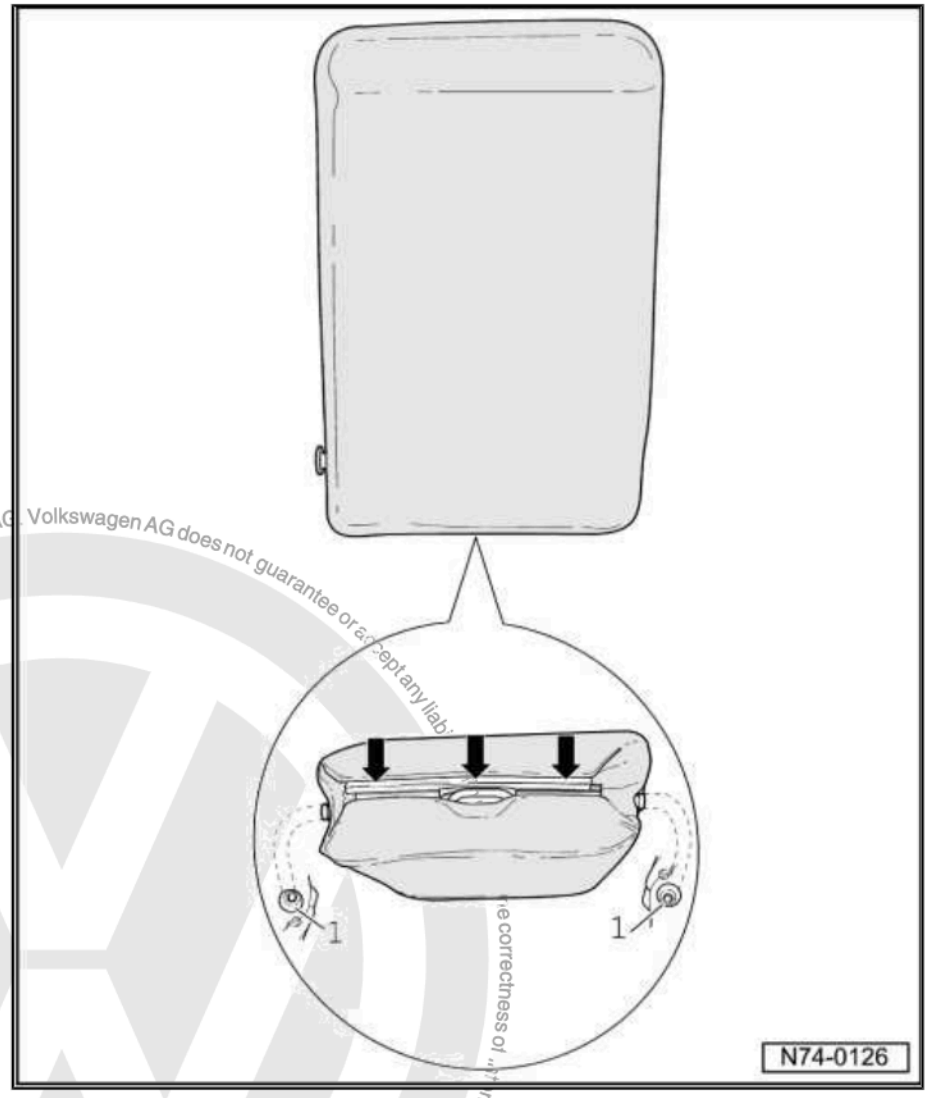

– Remove circlips -1-.
– Disconnect cover -arrows-.
– Remove cover -1- from cushion -2- -arrow-.

Installing

To install, perform the steps used in removal in reverse order.

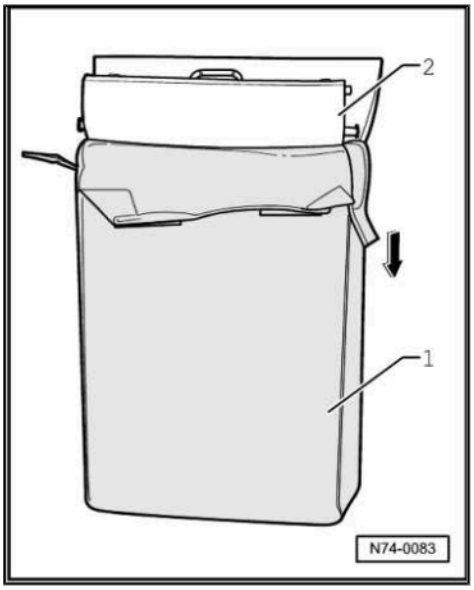

Protected by copyright. Copying for private or commercial purposes, in part or in whole, is not permitted unless authorised by Volkswagen AG. Volkswagen AG does not guarantee or accept any liability with respect to the correctness of information in this document. Copyright by Volkswagen AG.

1.3.4 Right Backrest Cover

Removing

Note

Illustration shows right-hand backrest, left-hand backrest can be removed by modifying these procedures slightly.

- Headrest removed

– Remove right backrest. Refer to ⇒ “2.3.4 Two-Part Rear Seat Backrest”, page 204 .

– Remove center arm rest.

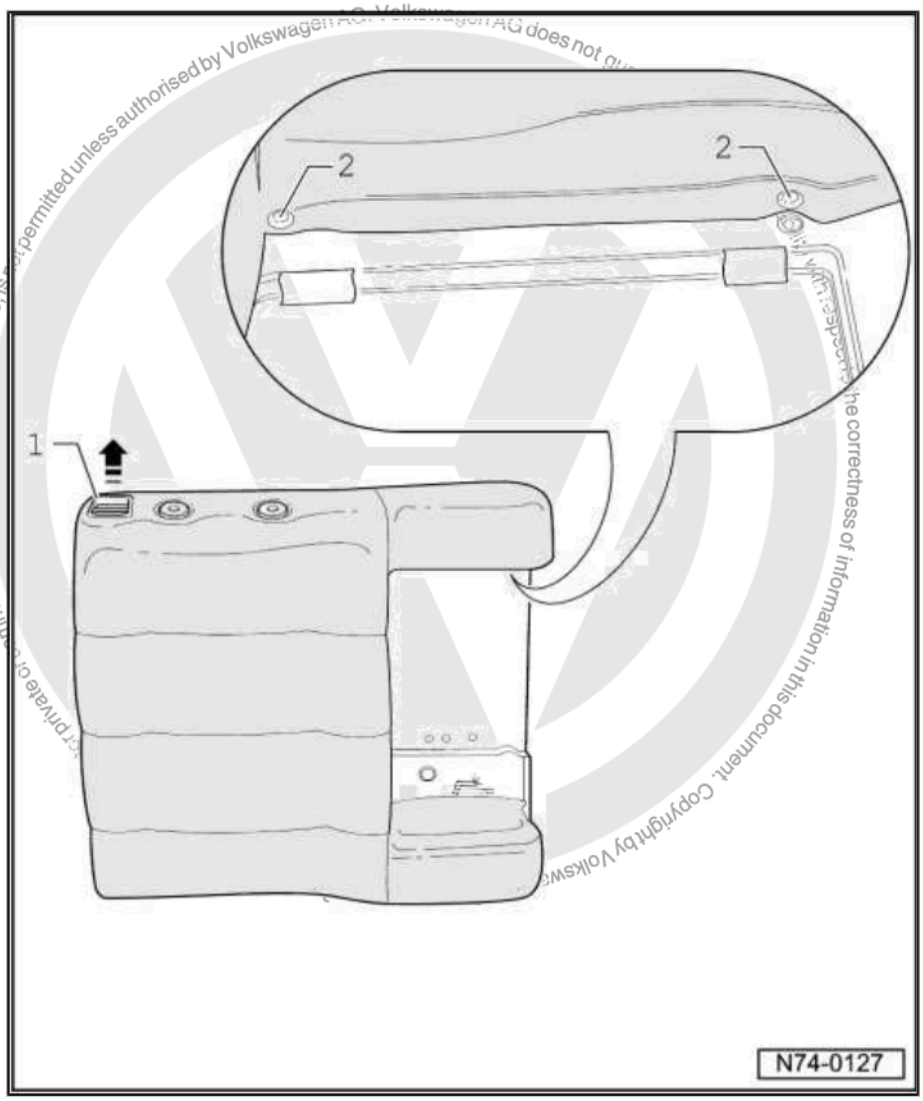

– Pry out locking backrest collar -1- -arrow-.

– Remove clips -2-.

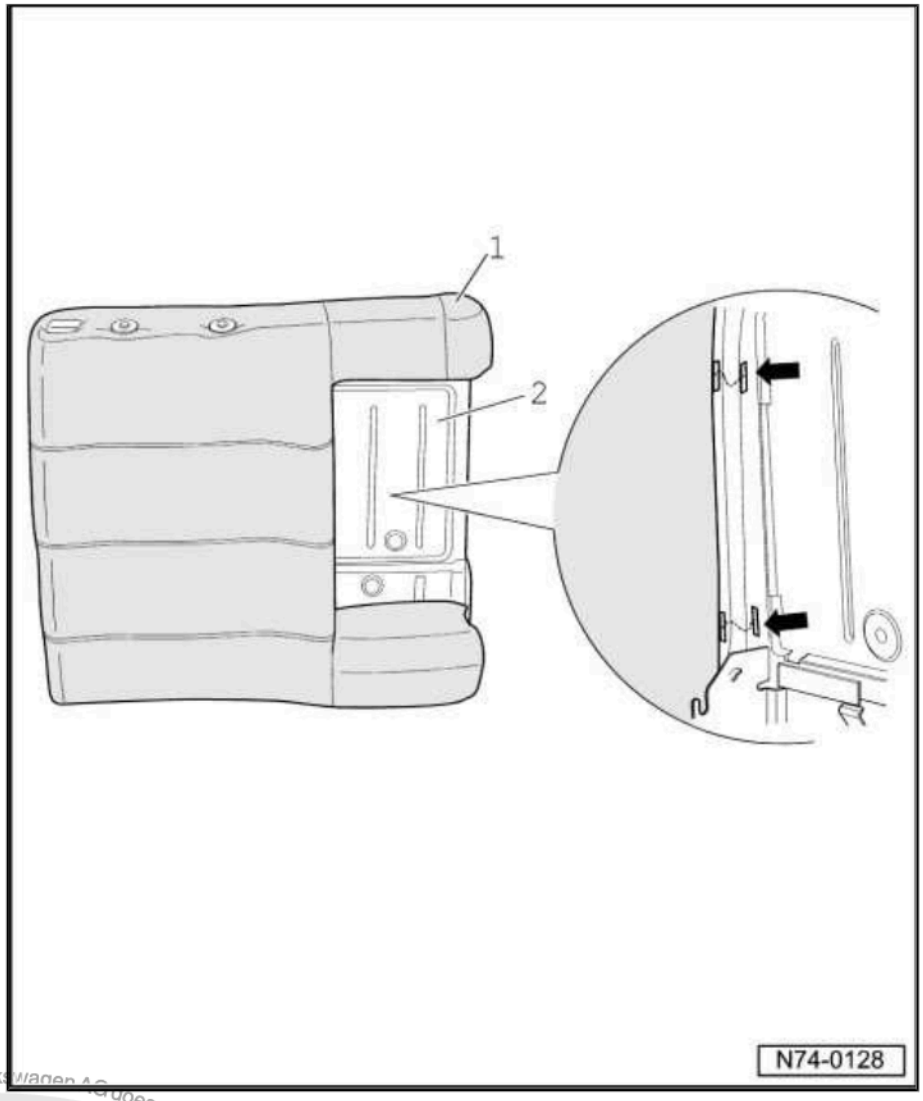

– Remove cover -1- from backrest frame -2- -arrows-.

Protected by copyright. Copying for private or commercial purposes, in part or in whole, is not permitted unless authorised by Volkswagen AG. Volkswagen AG does not guarantee or accept any liability with respect to the correctness of information in this document. Copyright by Volkswagen AG.

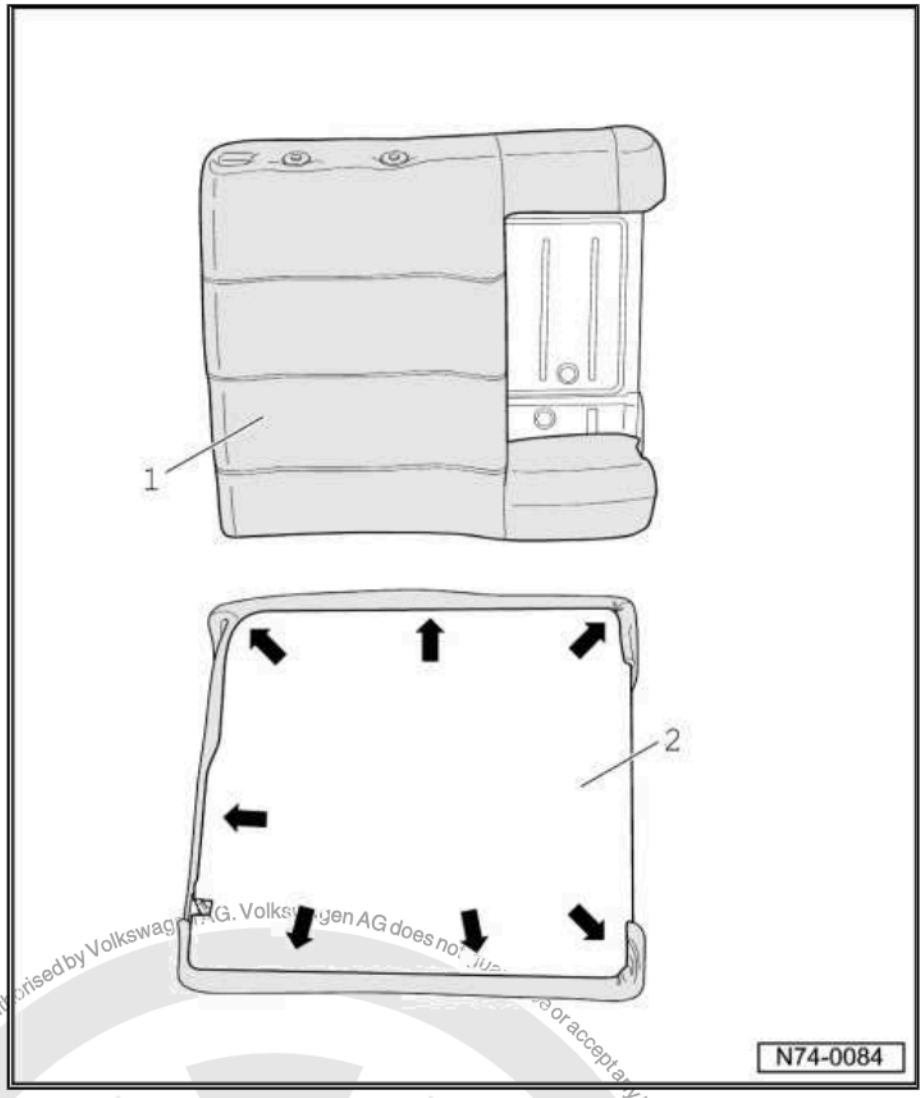

– Loosen cover -1- from backrest frame -2- -arrows-.

Protected by copyright. Copying for private or commercial purposes, in part or in whole, is not permitted unless authorised by Volkswagen AG. Volkswagen AG does not guarantee or accept any liability with respect to the correctness of information in this document. Copyright by Volkswagen AG.

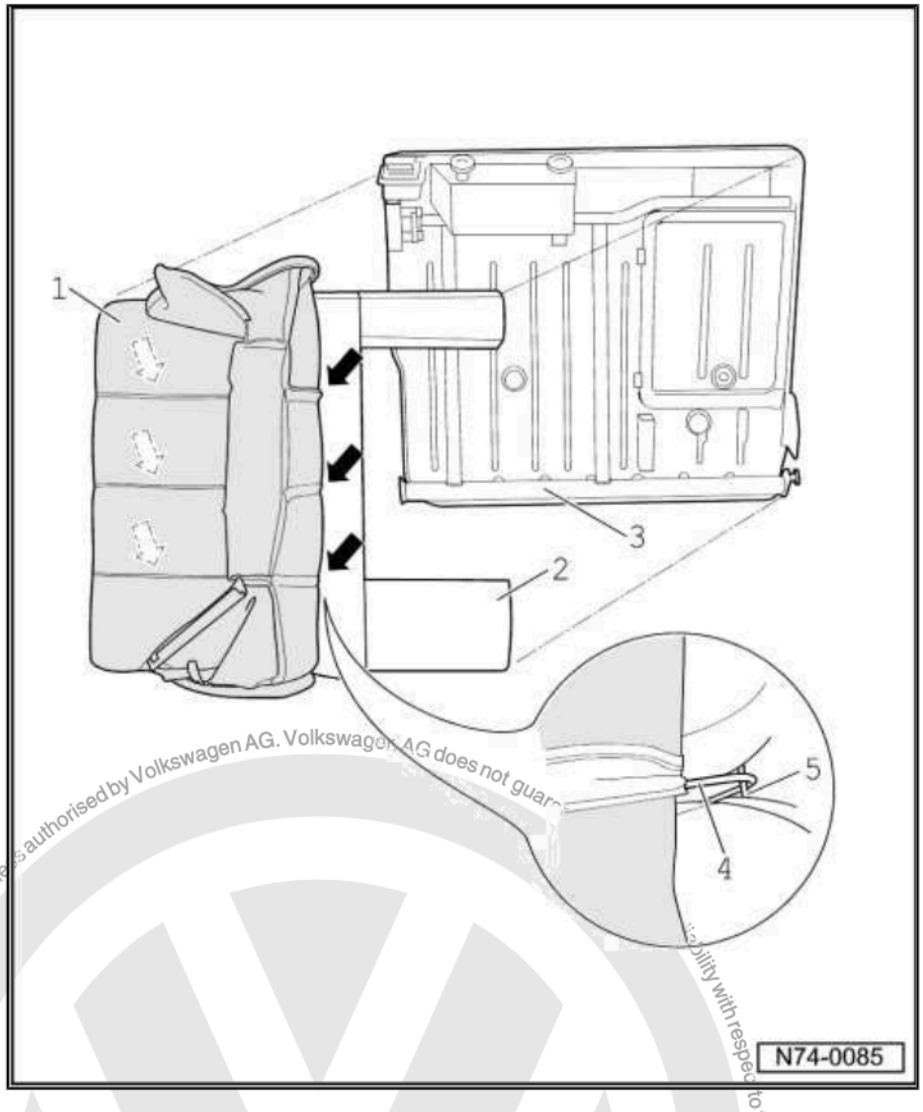

– Remove cover -1- and cushion -2- from backrest frame -3-.
– Detach tension wire -4- and cushion wire -5- -arrows-.
– Remove cover -1- from cushion -2-.

Installing

To install, perform the steps used in removal in reverse order.

Protected by copyright. Copying for private or commercial purposes, in part or in whole, is not permitted unless authorised by Volkswagen AG. Volkswagen AG does not guarantee the correctness of information in this document. Copyright by Volkswagen AG.

1.4 Seat Heating Elements

⇒ “1.4.1 Seat Heating Element”, page 252

⇒ “1.4.2 Backrest Heating Element”, page 252

⇒ “1.4.3 Recaro Seat and Backrest Heating Element”, page 254

1.4.1 Seat Heating Element

> ⚠ Caution
>
> *Do not install normal seat heater elements (for fabric seat covers) in vehicles with leather seat covers.*
>
> *There is a danger the seat heater may overheat.*

– Remove seat.

– Remove backrest. Refer to ⇒ “2.1.2 Front Backrest”, page 164.

– Remove seat cover.

– Remove heating element -1- from cushion -2-.

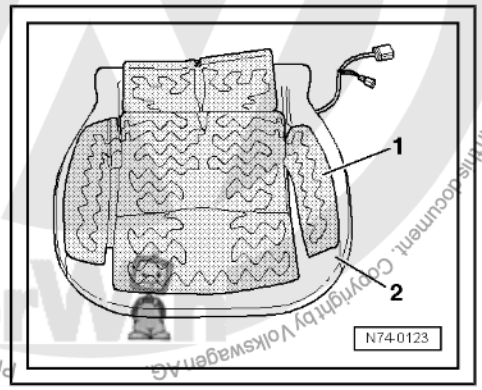

1.4.2 Backrest Heating Element

Removing

> ⚠ Caution
>
> *Do not install normal seat heater elements (for fabric seat covers) in vehicles with leather seat covers.*
>
> *There is a danger the seat heater may overheat.*

– Remove seat.

– Remove backrest. Refer to ⇒ “2.1.2 Front Backrest”, page 164 .

– Remove backrest cover.

Protected by copyright. Copying for private or commercial purposes, in part or in whole, is not permitted unless authorised by Volkswagen AG. Volkswagen AG does not guarantee or accept any liability with respect to the correctness of information in this document. Copyright by Volkswagen AG.

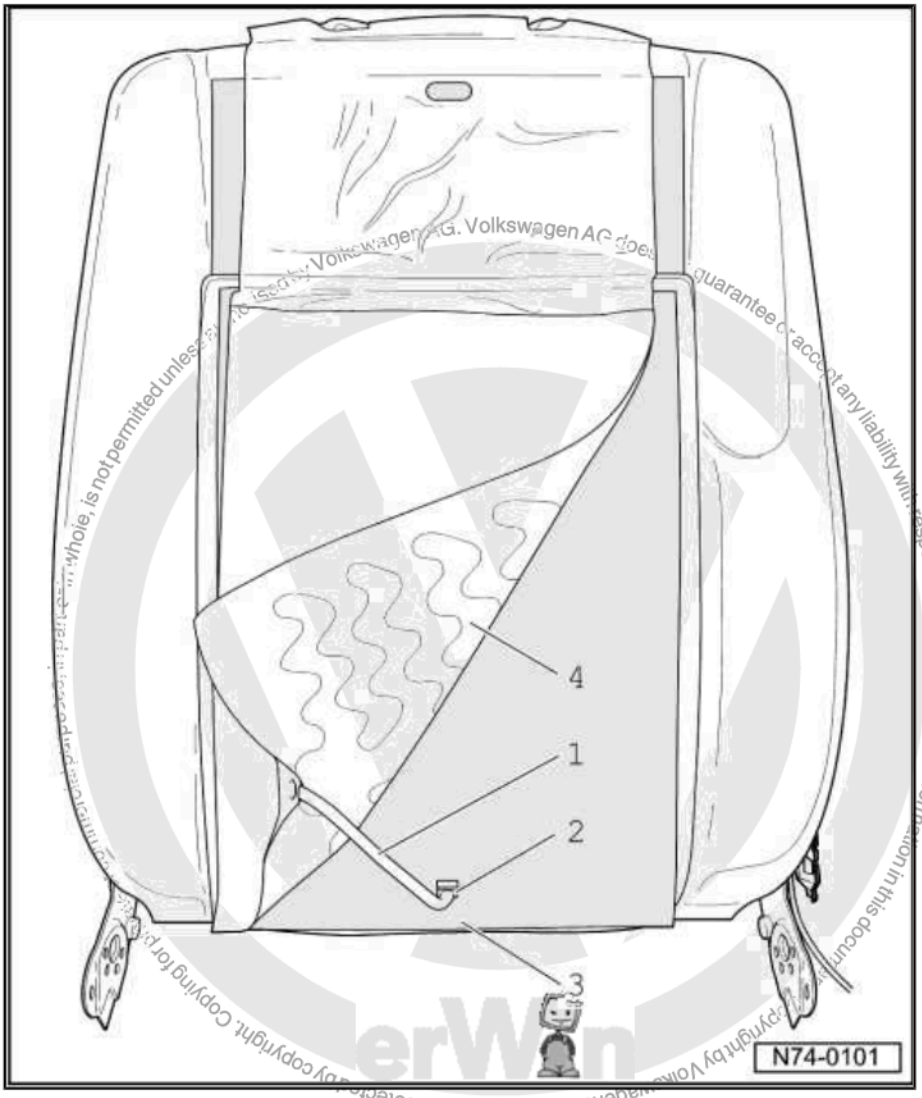

– Guide cable -1- through opening -2- in center part of cushion -3- and remove heating element -4-.

Installing

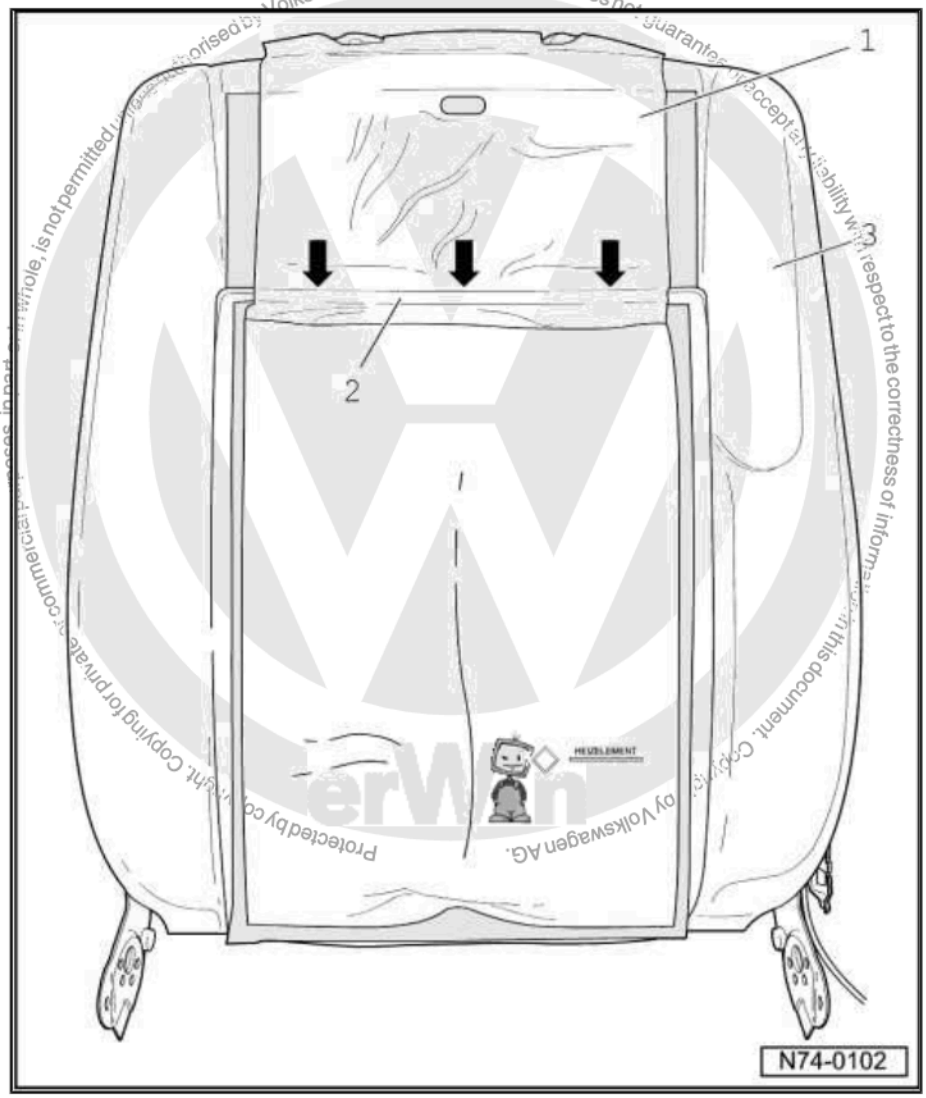

Note

- *When installing, heating element fabric -1- must be connected with backrest cover and backrest frame in recess -2- -arrows-.*
- *Item -3- shows backrest cushion.*

1.4.3 Recaro Seat and Backrest Heating Element

The Recaro seat has three seating elements, they are located in the backrest, the seat area and the seat surface extension.

In case of a defect, the new heating element should be bonded to the old heating element without wrinkles.

Remove wiring harness from old heating element.

If heating element is faulty, corresponding cover must be removed.

– Cover, removing from backrest. Refer to
⇒ “1.2.3 Backrest Cover and Cushion”, page 238

– Cover, removing from seat area. Refer to
⇒ “1.2.1 Seat Area Cover and Cushions”, page 236

– Cover, removing from seat surface extension. Refer to ⇒ “1.2.2 Seat Surface Extension Cover and Cushion”, page 237

Protected by copyright. Copying for private or commercial purposes, in part or in whole, is not permitted unless authorised by Volkswagen AG. Volkswagen AG does not guarantee or accept any liability with respect to the correctness of information in this document. Copyright by Volkswagen AG.

2 Special Tools

Special tools and workshop equipment required

- Pop Rivet Nut Pliers - VAS5073-

Edition: K0450822921 - FN - 11/11/2014 – TMP

Protected by copyright. Copying for private or commercial purposes, in part or in whole, is not permitted unless authorised by Volkswagen AG. Volkswagen AG does not guarantee or accept any liability with respect to the correctness of information in this document. Copyright by Volkswagen AG.

3 Revision History

Revision	Date	Job Type	Feedback #	Notes	Editor
1	11/11/2014	Factory New (Missing Book)	N/A	Conversion from SGML. NO changes detected. Standard updates completed	Tom Perry

Protected by copyright. Copying for private or commercial purposes, in part or in whole, is not permitted unless authorised by Volkswagen AG. Volkswagen AG does not guarantee or accept any liability with respect to the correctness of information in this document. Copyright by Volkswagen AG.

Cautions & Warnings

Please read these WARNINGS and CAUTIONS before proceeding with maintenance and repair work. You must answer that you have read and you understand these WARNINGS and CAUTIONS before you will be allowed to view this information.

- If you lack the skills, tools and equipment, or a suitable workshop for any procedure described in this manual, we suggest you leave such repairs to an authorized Volkswagen retailer or other qualified shop. We especially urge you to consult an authorized Volkswagen retailer before beginning repairs on any vehicle that may still be covered wholly or in part by any of the extensive warranties issued by Volkswagen.

- Disconnect the battery negative terminal (ground strap) whenever you work on the fuel system or the electrical system. Do not smoke or work near heaters or other fire hazards. Keep an approved fire extinguisher handy.

- Volkswagen is constantly improving its vehicles and sometimes these changes, both in parts and specifications, are made applicable to earlier models. Therefore, part numbers listed in this manual are for reference only. Always check with your authorized Volkswagen retailer parts department for the latest information.

- Any time the battery has been disconnected on an automatic transmission vehicle, it will be necessary to reestablish Transmission Control Module (TCM) basic settings using the VAG 1551 Scan Tool (ST).

- Never work under a lifted vehicle unless it is solidly supported on stands designed for the purpose. Do not support a vehicle on cinder blocks, hollow tiles or other props that may crumble under continuous load. Never work under a vehicle that is supported solely by a jack. Never work under the vehicle while the engine is running.

- For vehicles equipped with an anti-theft radio, be sure of the correct radio activation code before disconnecting the battery or removing the radio. If the wrong code is entered when the power is restored, the radio may lock up and become inoperable, even if the correct code is used in a later attempt.

- If you are going to work under a vehicle on the ground, make sure that the ground is level. Block the wheels to keep the vehicle from rolling. Disconnect the battery negative terminal (ground strap) to prevent others from starting the vehicle while you are under it.

- Do not attempt to work on your vehicle if you do not feel well. You increase the danger of injury to yourself and others if you are tired, upset or have taken medicine or any other substances that may impair you or keep you from being fully alert.

- Never run the engine unless the work area is well ventilated. Carbon monoxide (CO) kills.

- Always observe good workshop practices. Wear goggles when you operate machine tools or work with acid. Wear goggles, gloves and other protective clothing whenever the job requires working with harmful substances.

- Tie long hair behind your head. Do not wear a necktie, a scarf, loose clothing, or a necklace when you work near machine tools or running engines. If your hair, clothing, or jewelry were to get caught in the machinery, severe injury could result.

- Do not re-use any fasteners that are worn or deformed in normal use. Some fasteners are designed to be used only once and are unreliable and may fail if used a second time. This includes, but is not limited to, nuts, bolts, washers, circlips and cotter pins. Always follow the recommendations in this manual - replace these fasteners with new parts where indicated, and any other time it is deemed necessary by inspection.

Protected by copyright. Copyright by Volkswagen AG.

© 2002 Volkswagen of America, Inc.
All rights reserved. Information contained in this document is based on the latest information available at the time of printing and is subject to the copyright and other intellectual property rights of Volkswagen of America, Inc., its affiliated companies and its licensors. All rights are reserved to make changes at any time without notice. No part of this document may be reproduced, stored in a retrieval system, or transmitted in any form or by any means, electronic, mechanical, photocopying, recording, or otherwise, nor may these materials be modified or reposted to other sites, without the prior expressed written permission of the publisher.
Version 1.0

Cautions & Warnings

- Illuminate the work area adequately but safely. Use a portable safety light for working inside or under the vehicle. Make sure the bulb is enclosed by a wire cage. The hot filament of an accidentally broken bulb can ignite spilled fuel or oil.

- Friction materials such as brake pads and clutch discs may contain asbestos fibers. Do not create dust by grinding, sanding, or by cleaning with compressed air. Avoid breathing asbestos fibers and asbestos dust. Breathing asbestos can cause serious diseases such as asbestosis or cancer, and may result in death.

- Finger rings should be removed so that they cannot cause electrical shorts, get caught in running machinery, or be crushed by heavy parts.

- Before starting a job, make certain that you have all the necessary tools and parts on hand. Read all the instructions thoroughly; do not attempt shortcuts. Use tools that are appropriate to the work and use only replacement parts meeting Volkswagen specifications. Makeshift tools, parts and procedures will not make good repairs.

- Catch draining fuel, oil or brake fluid in suitable containers. Do not use empty food or beverage containers that might mislead someone into drinking from them. Store flammable fluids away from fire hazards. Wipe up spills at once, but do not store the oily rags, which can ignite and burn spontaneously.

- Use pneumatic and electric tools only to loosen threaded parts and fasteners. Never use these tools to tighten fasteners, especially on light alloy parts. Always use a torque wrench to tighten fasteners to the tightening torque listed.

- Keep sparks, lighted matches, and open flame away from the top of the battery. If escaping hydrogen gas is ignited, it will ignite gas trapped in the cells and cause the battery to explode.

- Be mindful of the environment and ecology. Before you drain the crankcase, find out the proper way to dispose of the oil. Do not pour oil onto the ground, down a drain, or into a stream, pond, or lake. Consult local ordinances that govern the disposal of wastes.

- The air-conditioning (A/C) system is filled with a chemical refrigerant that is hazardous. The A/C system should be serviced only by trained automotive service technicians using approved refrigerant recovery/recycling equipment, trained in related safety precautions, and familiar with regulations governing the discharging and disposal of automotive chemical refrigerants.

- Before doing any electrical welding on vehicles equipped with anti-lock brakes (ABS), disconnect the battery negative terminal (ground strap) and the ABS control module connector.

- Do not expose any part of the A/C system to high temperatures such as open flame. Excessive heat will increase system pressure and may cause the system to burst.

- When boost-charging the battery, first remove the fuses for the Engine Control Module (ECM), the Transmission Control Module (TCM), the ABS control module, and the trip computer. In cases where one or more of these components is not separately fused, disconnect the control module connector(s).

- Some of the vehicles covered by this manual are equipped with a supplemental restraint system (SRS), that automatically deploys an airbag in the event of a frontal impact. The airbag is operated by an explosive device. Handled improperly or without adequate safeguards, it can be accidentally activated and cause serious personal injury. To guard against personal injury or airbag system failure, only trained Volkswagen Service technicians should test, disassemble or service the airbag system.

© 2002 Volkswagen of America, Inc.
All rights reserved. Information contained in this document is based on the latest information available at the time of printing and is subject to the copyright and other intellectual property rights of Volkswagen of America, Inc., its affiliated companies and its licensors. All rights are reserved to make changes at any time without notice. No part of this document may be reproduced, stored in a retrieval system, or transmitted in any form or by any means, electronic, mechanical, photocopying, recording, or otherwise, nor may these materials be modified or reposted to other sites, without the prior expressed written permission of the publisher.
Version 1.0

Cautions & Warnings

- Do not quick-charge the battery (for boost starting) for longer than one minute, and do not exceed 16.5 volts at the battery with the boosting cables attached. Wait at least one minute before boosting the battery a second time.

- Never use a test light to conduct electrical tests of the airbag system. The system must only be tested by trained Volkswagen Service technicians using the VAG 1551 Scan Tool (ST) or an approved equivalent. The airbag unit must never be electrically tested while it is not installed in the vehicle.

- Some aerosol tire inflators are highly flammable. Be extremely cautious when repairing a tire that may have been inflated using an aerosol tire inflator. Keep sparks, open flame or other sources of ignition away from the tire repair area. Inflate and deflate the tire at least four times before breaking the bead from the rim. Completely remove the tire from the rim before attempting any repair.

- When driving or riding in an airbag-equipped vehicle, never hold test equipment in your hands or lap while the vehicle is in motion. Objects between you and the airbag can increase the risk of injury in an accident.

I have read and I understand these Cautions and Warnings.

Protected by copyright. Copying for private or commercial purposes, in part or in whole, is not permitted unless authorised by Volkswagen AG. Volkswagen AG does not guarantee or accept any liability with respect to the correctness of information in this document. Copyright by Volkswagen AG.

© 2002 Volkswagen of America, Inc.
All rights reserved. Information contained in this document is based on the latest information available at the time of printing and is subject to the copyright and other intellectual property rights of Volkswagen of America, Inc., its affiliated companies and its licensors. All rights are reserved to make changes at any time without notice. No part of this document may be reproduced, stored in a retrieval system, or transmitted in any form or by any means, electronic, mechanical, photocopying, recording, or otherwise, nor may these materials be modified or reposted to other sites, without the prior expressed written permission of the publisher.
Version 1.0